Picade X HAT (PIM462): HAT header, EEPROM, and Power

Raspberry Pi connector

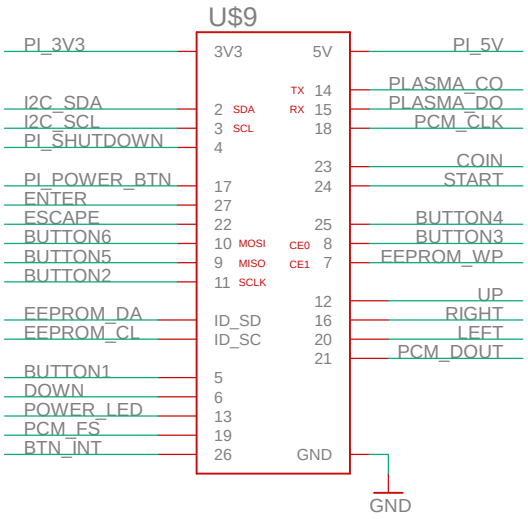

USB power connector

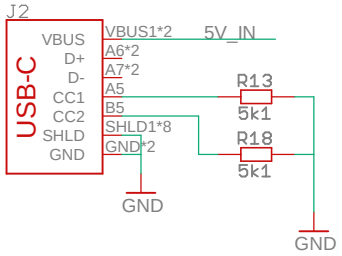

Power LED

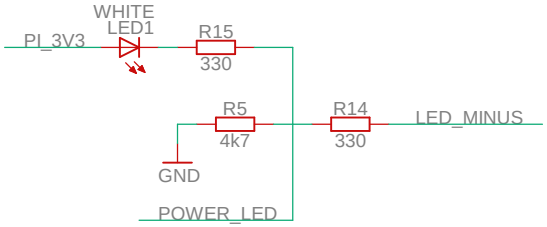

Level shift POWER_BTN for Pi

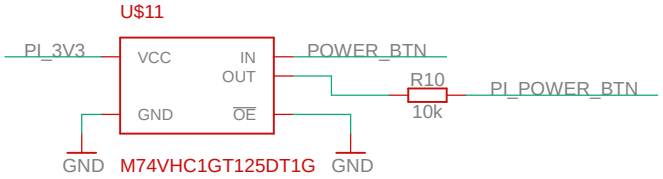

Power button

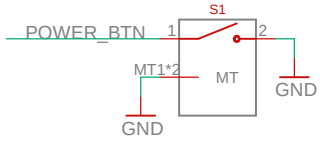

HAT EEPROM

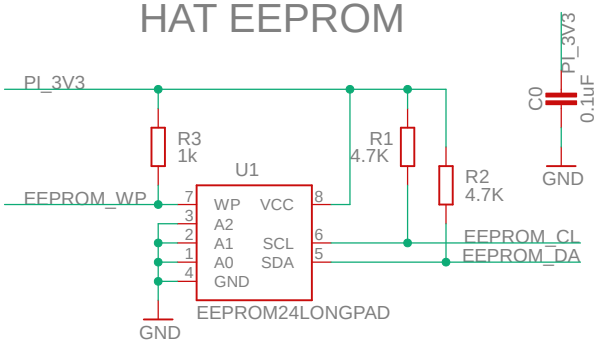

Power smart switch

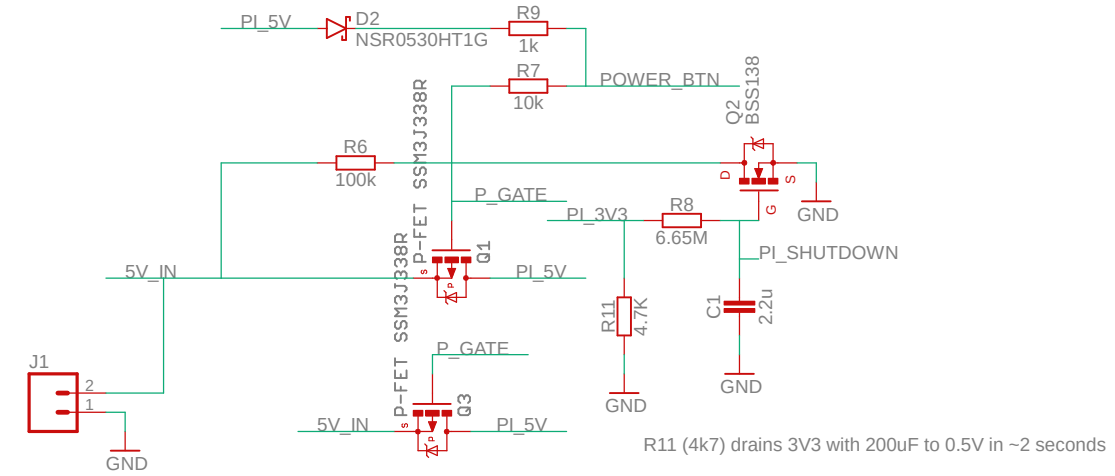

Picade X HAT (PIM462): Headers and Audio

Buttons

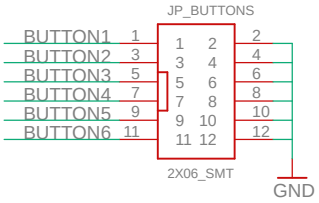

Joystick

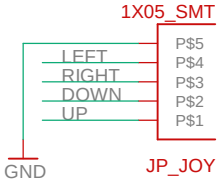

Hack

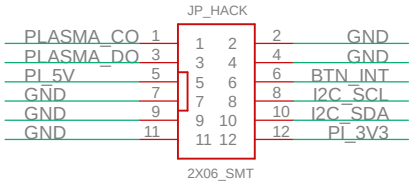

Plasma output

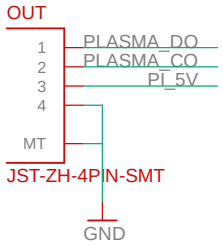

Utility / Sound

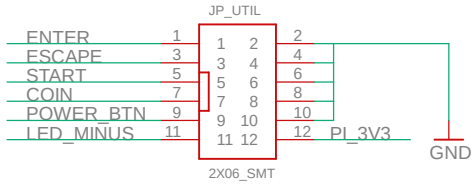

Amp shutdown circuitry

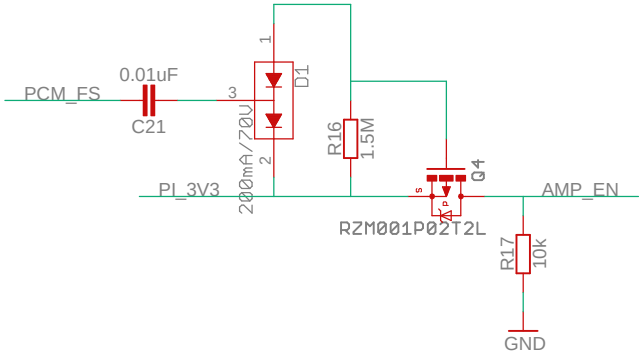

Audio DAC+amp

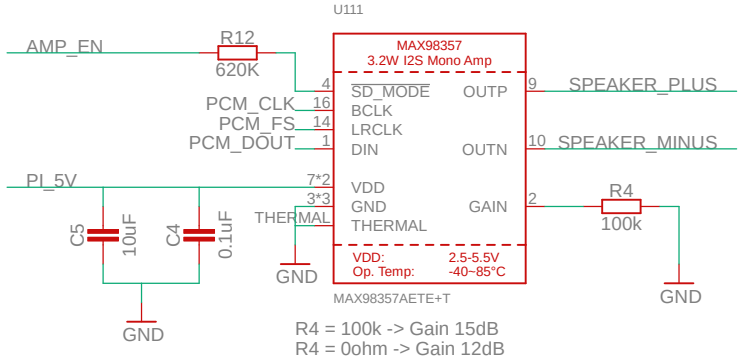

R4 = 100k -> Gain 15dB
R4 = 0ohm -> Gain 12dB
R4 DNP -> Gain 9dB
(Gain values of 6dB and 3dB would need a resistor to PI_5V)

(resistances at 5V / 3V3 input)
R12 = 1M/620k -> mix both channels
R12 = 0ohm -> left channel
R12 = 370k/220k -> right channel

Speaker

