Pre-Installation

Selecting a Location

Measuring the Distance

Anker SOLIX Solar Panel Mount for Flat Roof and Backyard Installation

Components Overview

Installation

What You Need

Anker SOLIX Solar Panel Mount for Pitched Tiled Roof Installation

Installation

What You Need

Anker SOLIX Solar Panel Mount for Pitched Bitumen and Metal Roof Installation

Components Overview

Installation

What You Need

Anker SOLIX Solar Panel Mount for Balcony Installation

Components Overview

Installation

What You Need

Anker SOLIX Solar Panel Mount for Wall Installation

Installation

What You Need

Pre-Installation

⚠ If you wish to verify and commission your solar system immediately, complete the installation when the weather is sunny.

⚠ During installation or removal, we recommend that at least two people work together.

Selecting a Location

The solar panel can be installed on the balcony or the ground. Different locations require different installation methods and accessories. Select an appropriate location before installing the solar panels.

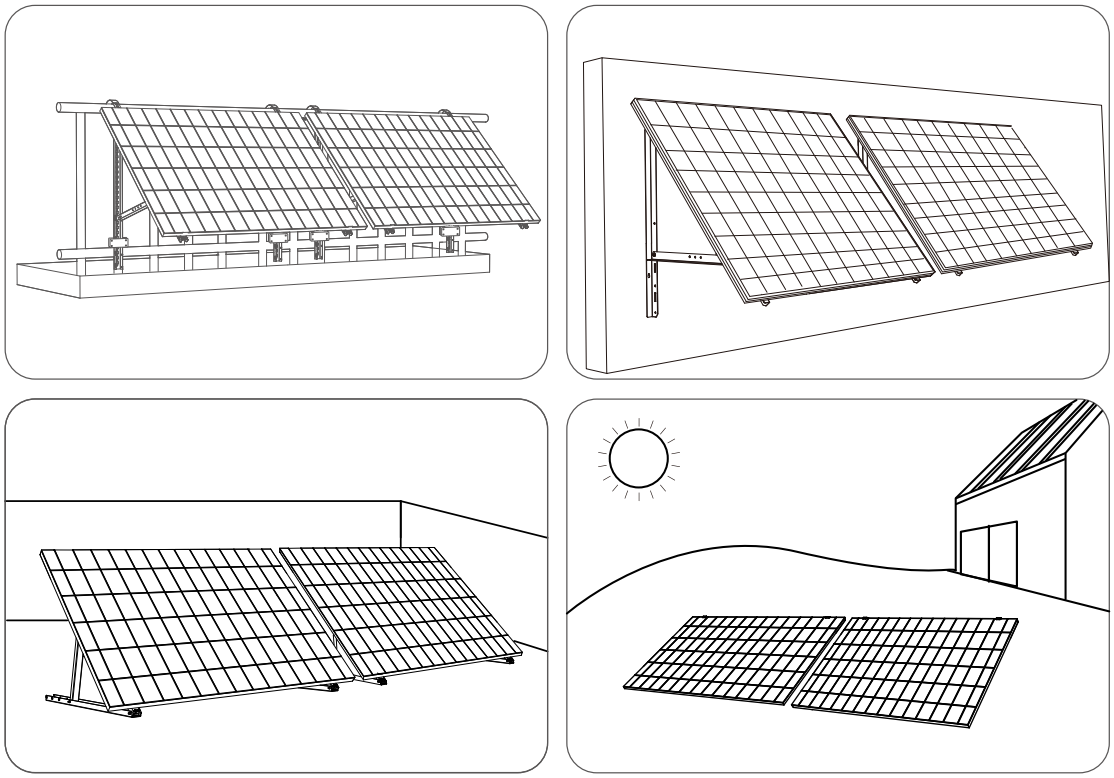

Measuring the Distance

Determine the position of the microinverter and solar panel with the Schuko connection cable and solar panel's extension cable.

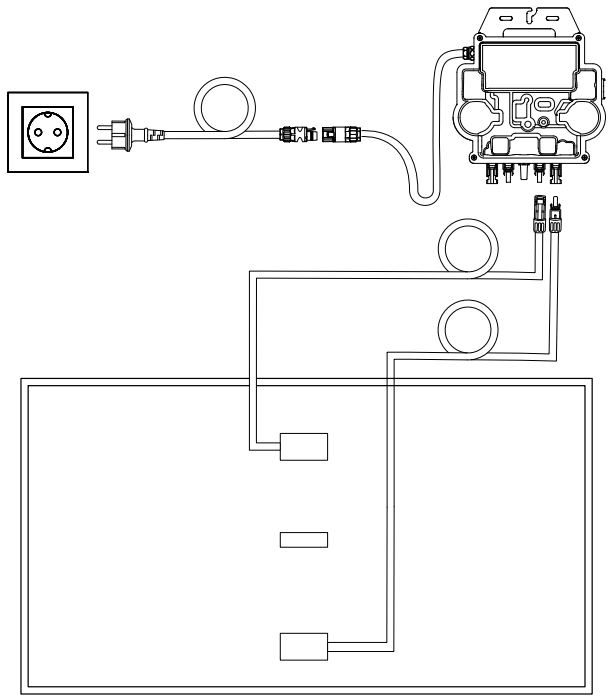

Additional extension cables may be required. Please purchase them if needed.

Anker SOLIX Solar Panel Mount for Flat Roof and Backyard Installation



ANKER SOLIX

Components Overview

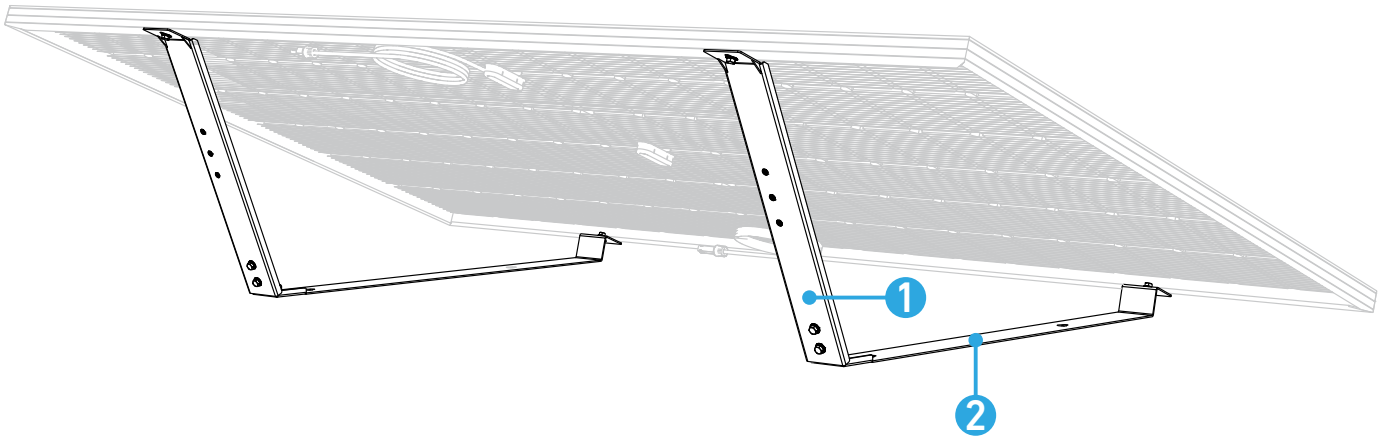

1 Pitched Support Beam
2 Bottom Support Beam
Angle: 20° (Between ground and PV panel), 120° (Maximum)

Installation

What You Need

A 470 mm

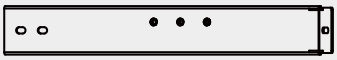

Pitched Support Beam (×4)

B 866.4 mm

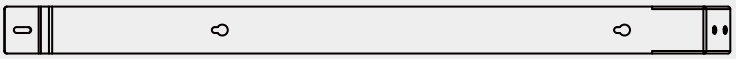

Bottom Support Beam (×4)

C

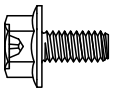

M6 × 14mm Flange Bolt
(×19)

D



M6 Flange Nut
(×8)

E

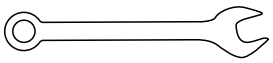

Wrench

F

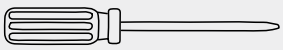

Screwdriver

G

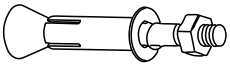

SUS304 Expansion Bolt
(×8)

H

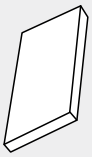

Adhesive Rubber Pad
(×12)

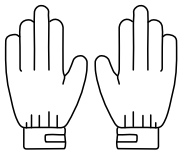

Work Gloves
(Not included)

1. Mount the bottom support beams to pitched support beams with M6 × 14mm flange bolts.



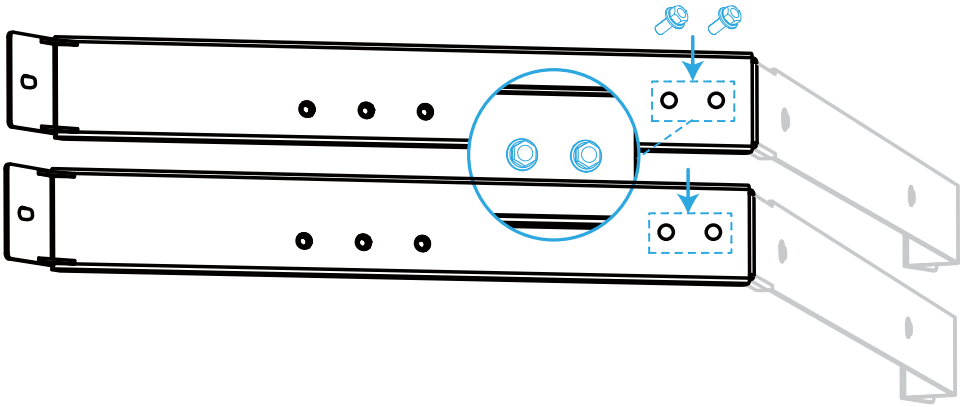

2. Attach the adhesive rubber pads to the bottom support beams.



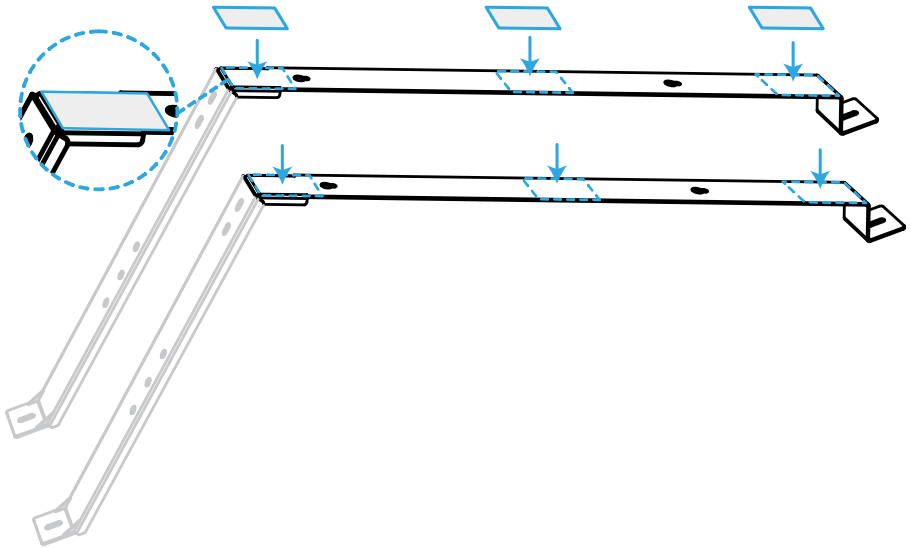

3. Mount the beams on solar panel with M6 14mm flange bolts and M6 flange nuts.

C x4



M6 × 14mm Flange Bolt

D x4



M6 Flange Nut

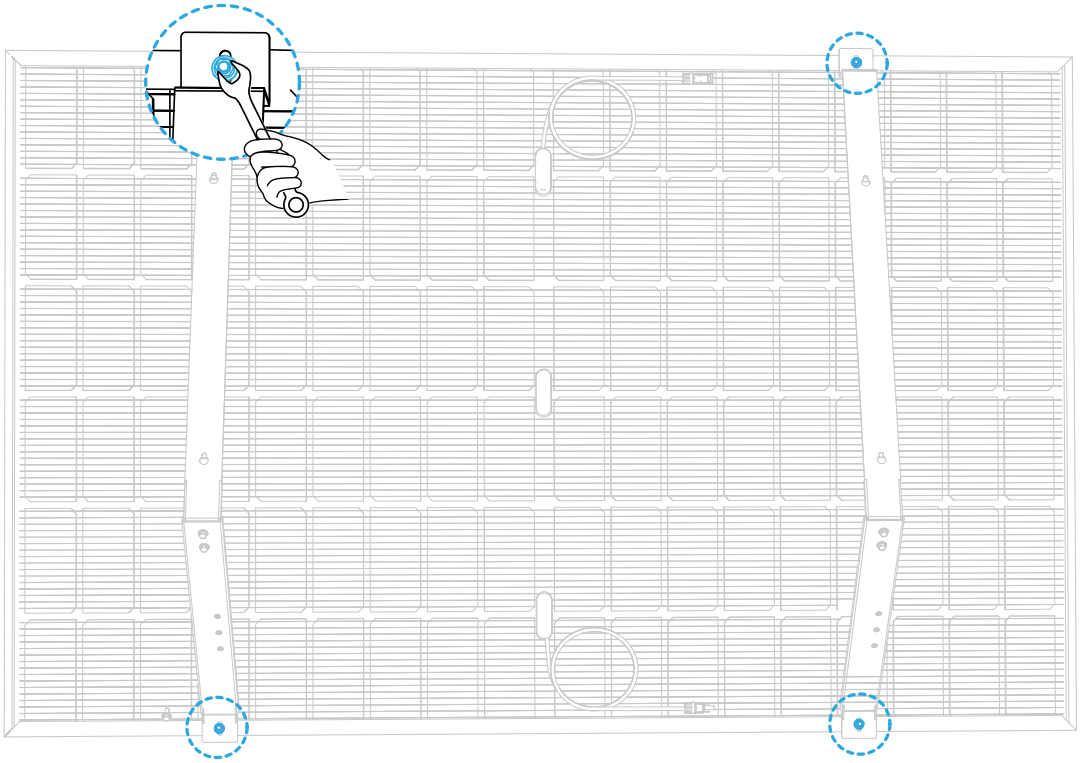

4. Secure the bottom support beams with SUS304 expansion bolts.

G x4

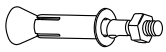

SUS304 Expansion Bolt

5. Install the microinverter to the beams.

C x3



M6 × 14mm Flange Bolt

6. Repeat the steps above to install another solar panel.

Anker SOLIX Solar Panel Mount for Pitched Tiled Roof Installation



ANKER SOLIX

Components Overview

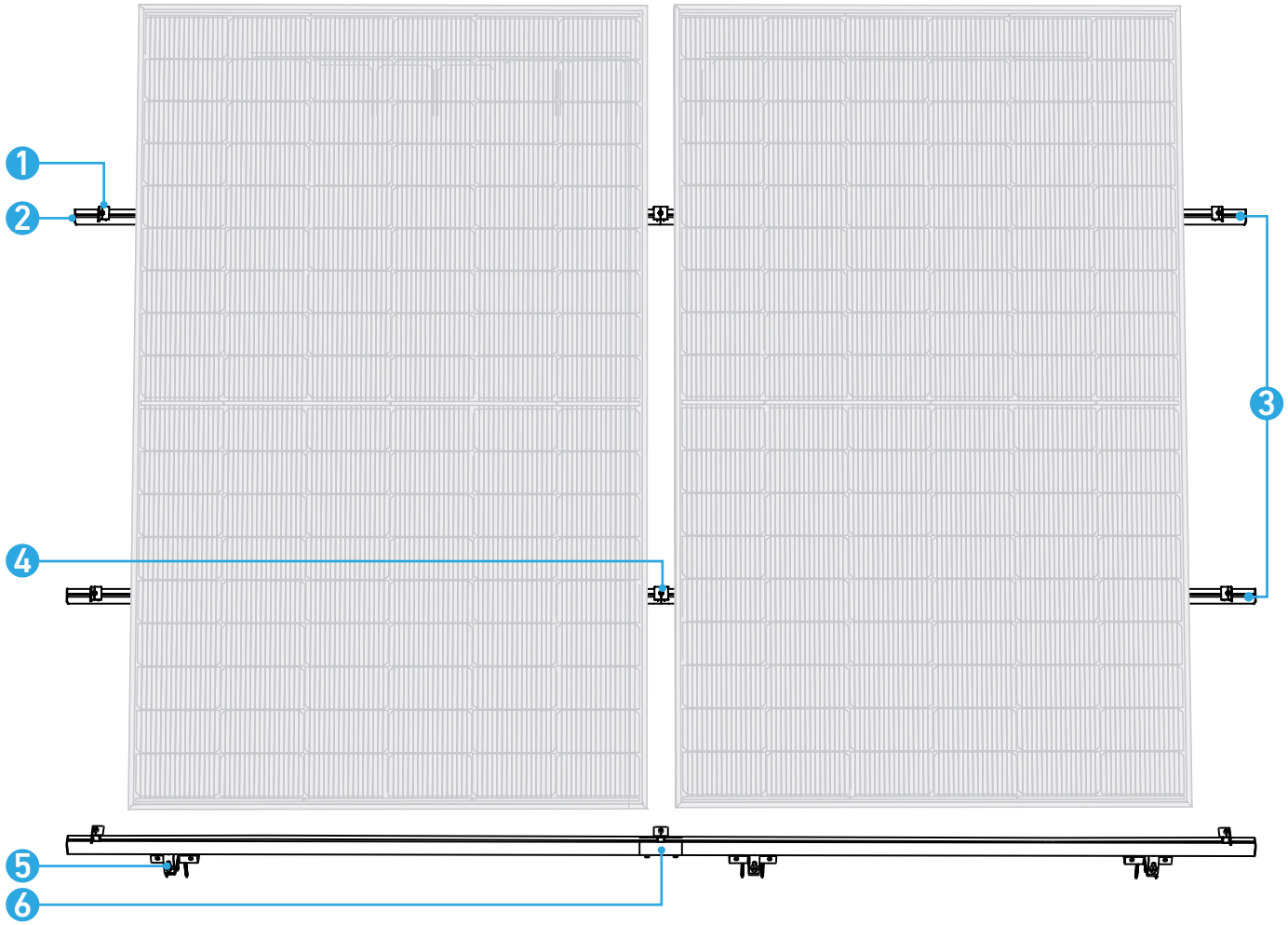

1. End Clamp
2. Rail Cap
3. Rail
4. Mid Clamp
5. Hook
6. Rail Connector

Installation

What You Need

A

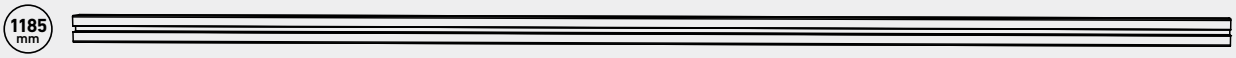

Rail
(×4)

B

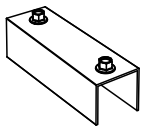

Rail Connector
(×2)

C



End Clamp
(×4)

D



Mid Clamp
(×2)

E

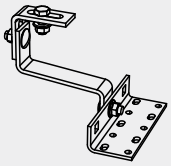

Hook
(×6)

F



Wooden Screw
(×20)

G



Rail Cap
(×4)

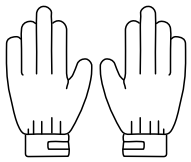

Work Gloves
(Not included)

1. Measure and confirm the location for installing solar panels.

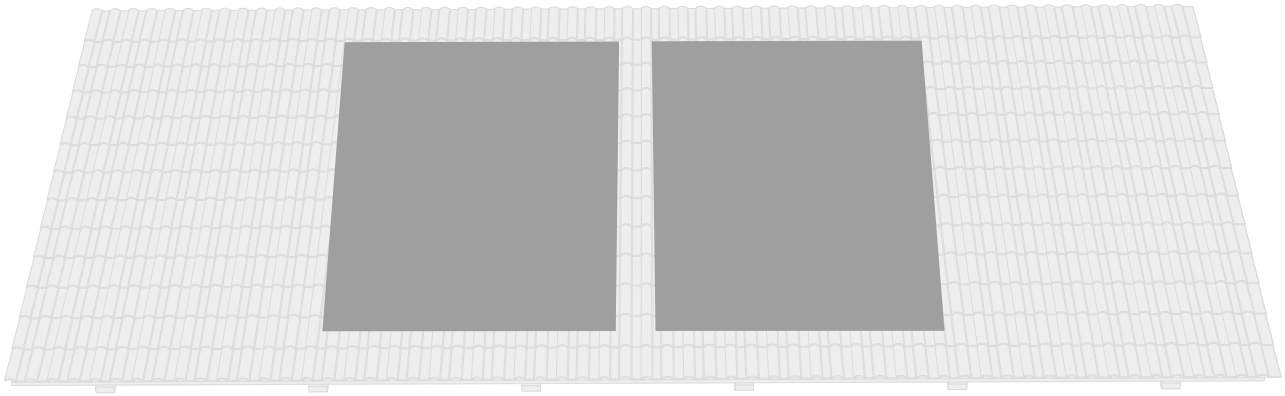

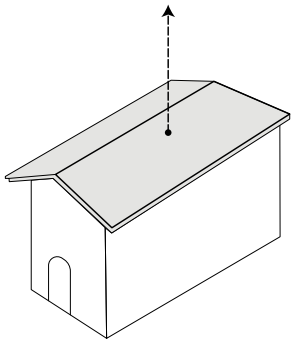

2. Lift the roof tiles. Use wooden screws to secure hooks to wooden purlins.

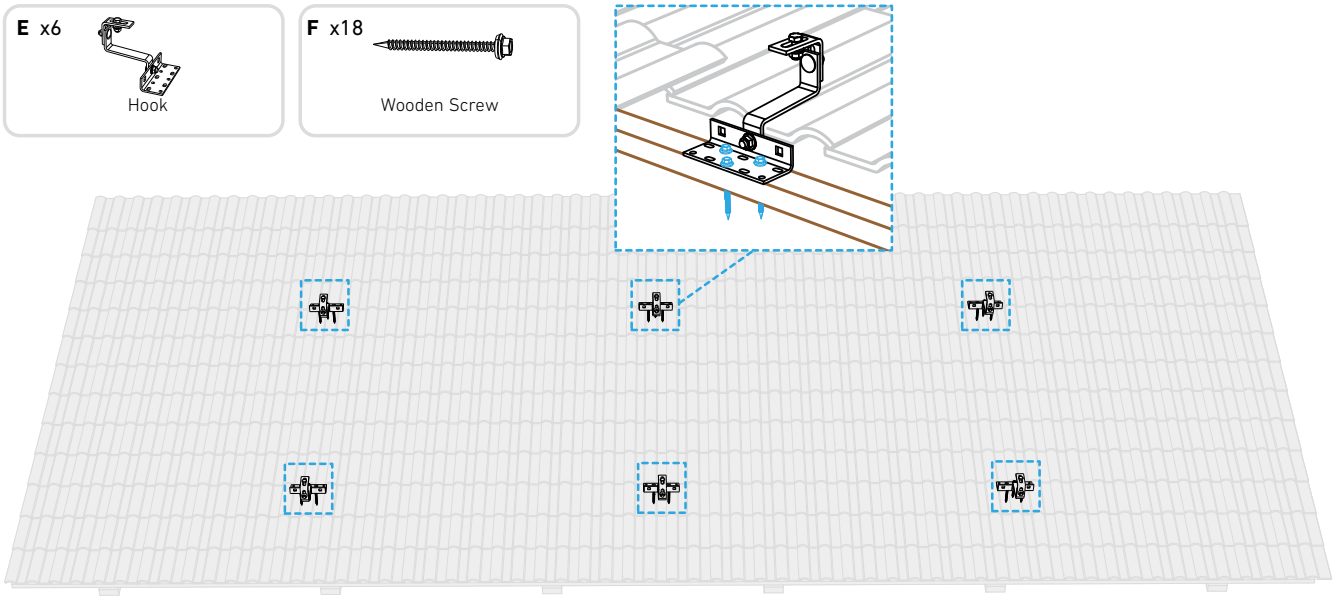

3. Slide the bolts onto the hooks on the underside of all the rails.

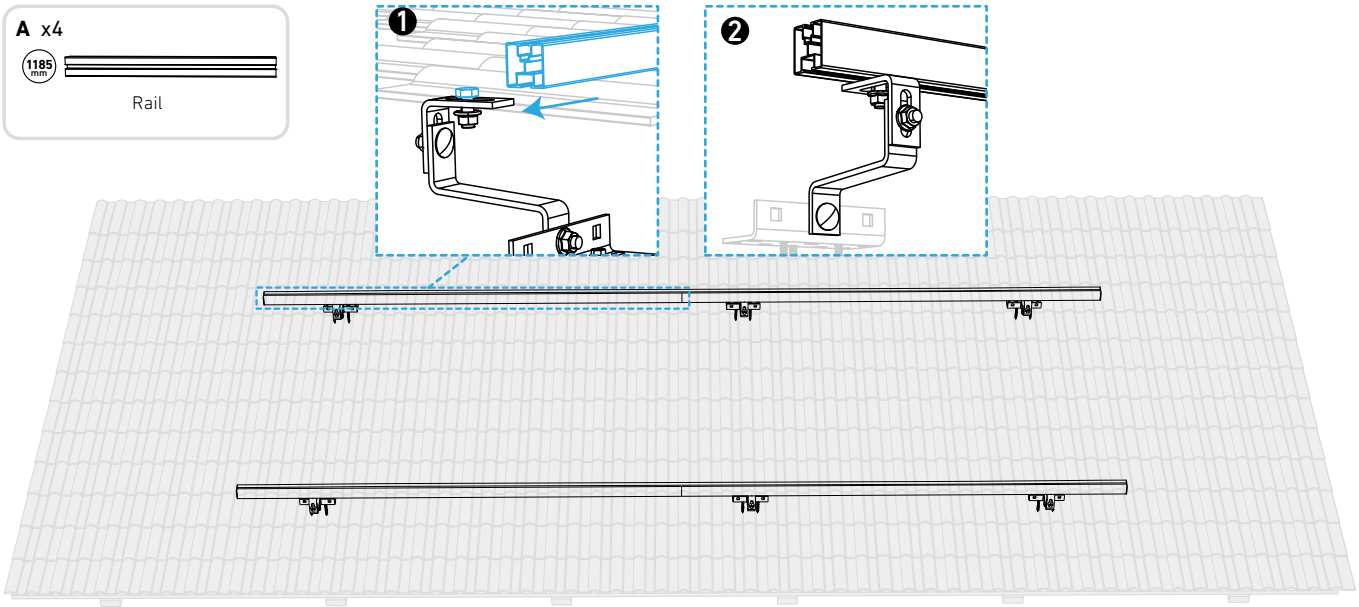

4. Connect the two rail ends with a rail connector.

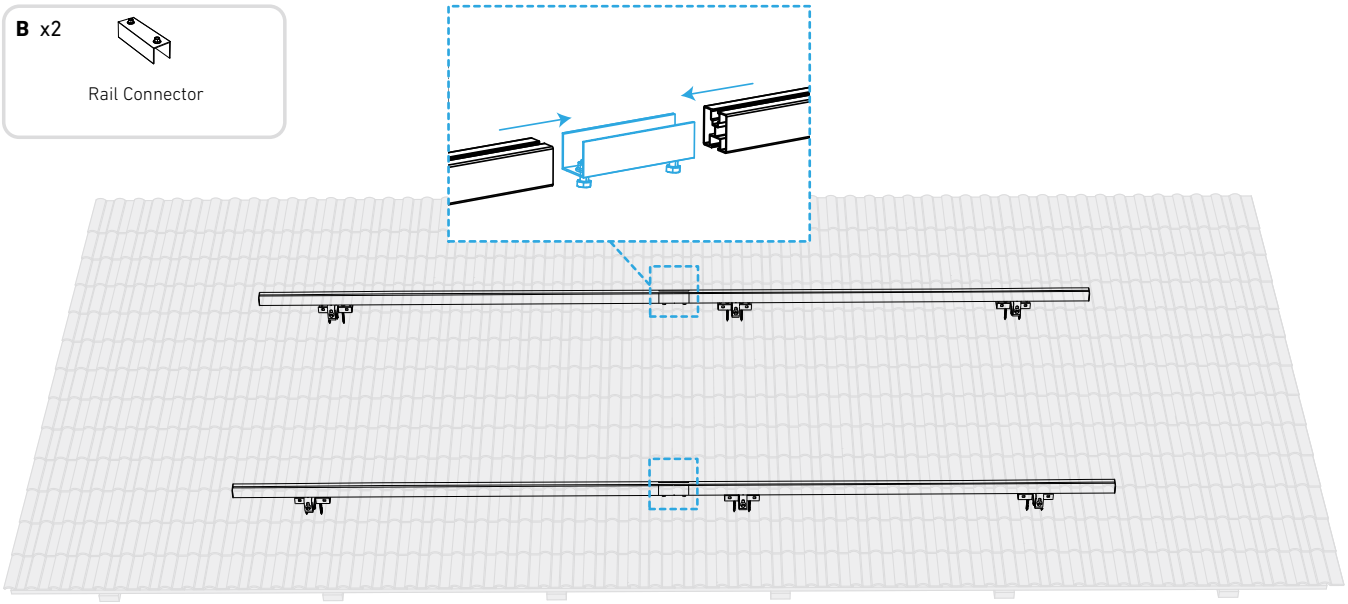

5. Install the left-side end clamps and a solar panel on the rail ends.
① Press end clamps directly into the rail ends.
② Tighten the end clamp bolts.

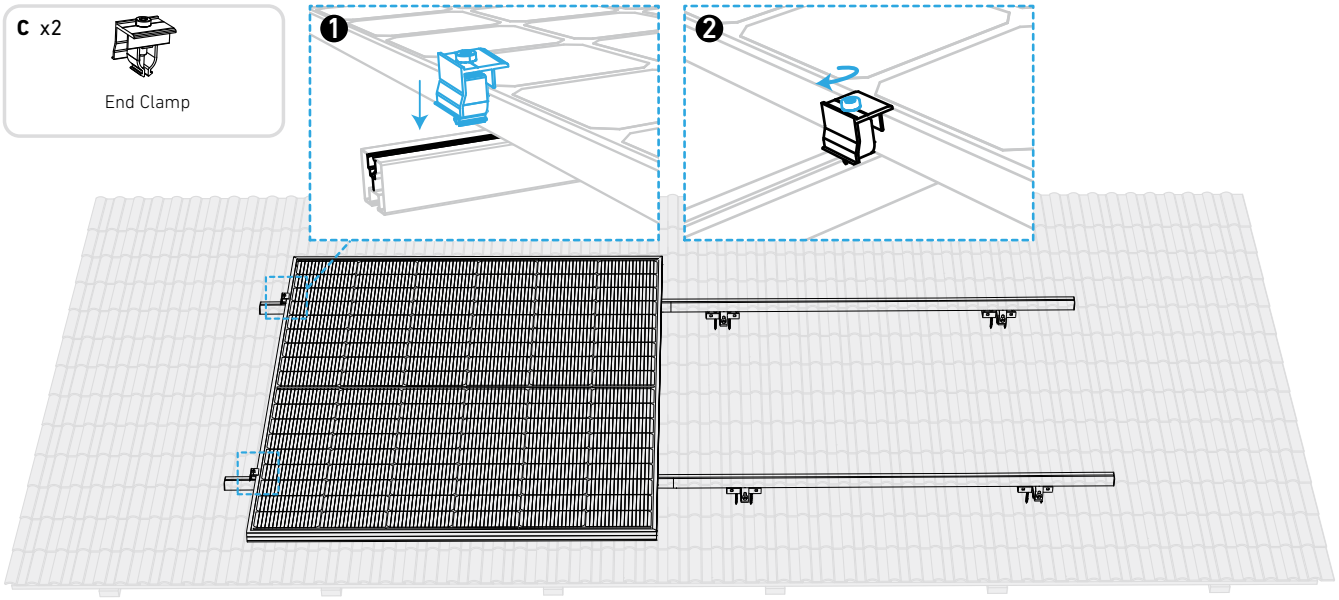

6. Install mid clamps and another solar panel on the rail ends.
① Press mid clamps directly into rails and insert the solar panel.
② Tighten the mid clamp bolts.

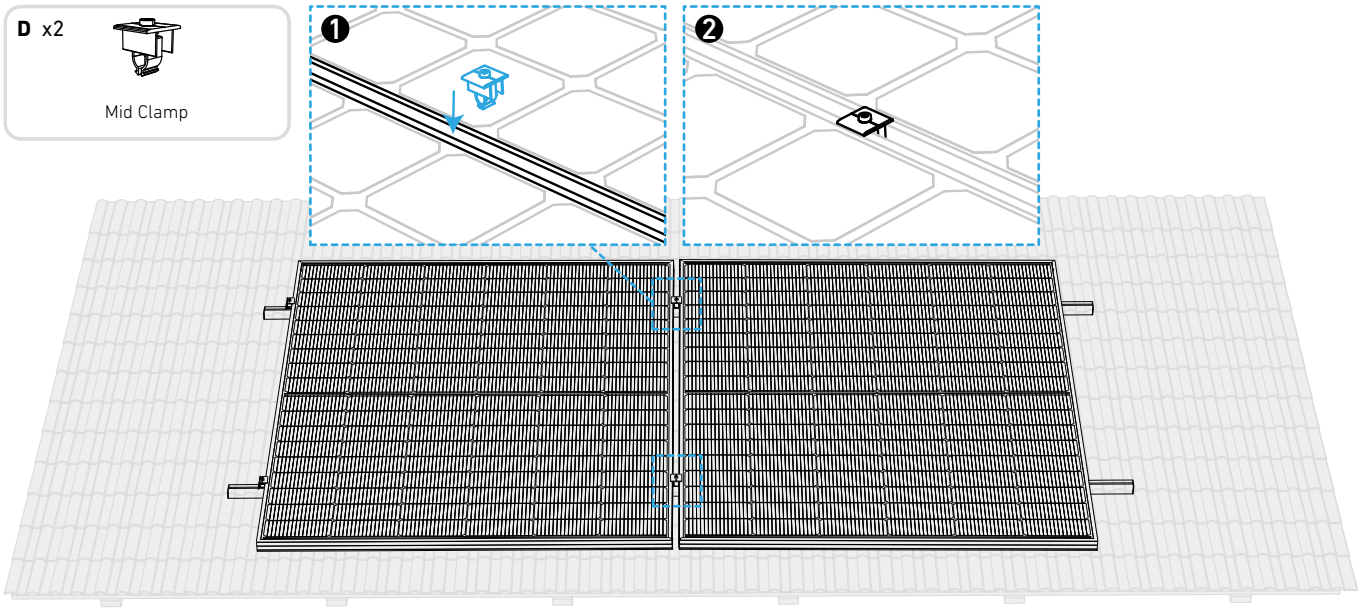

7. Install the right-side end clamps on the rail ends.
① Press end clamps directly into the rail ends.
② Tighten the end clamp bolts.

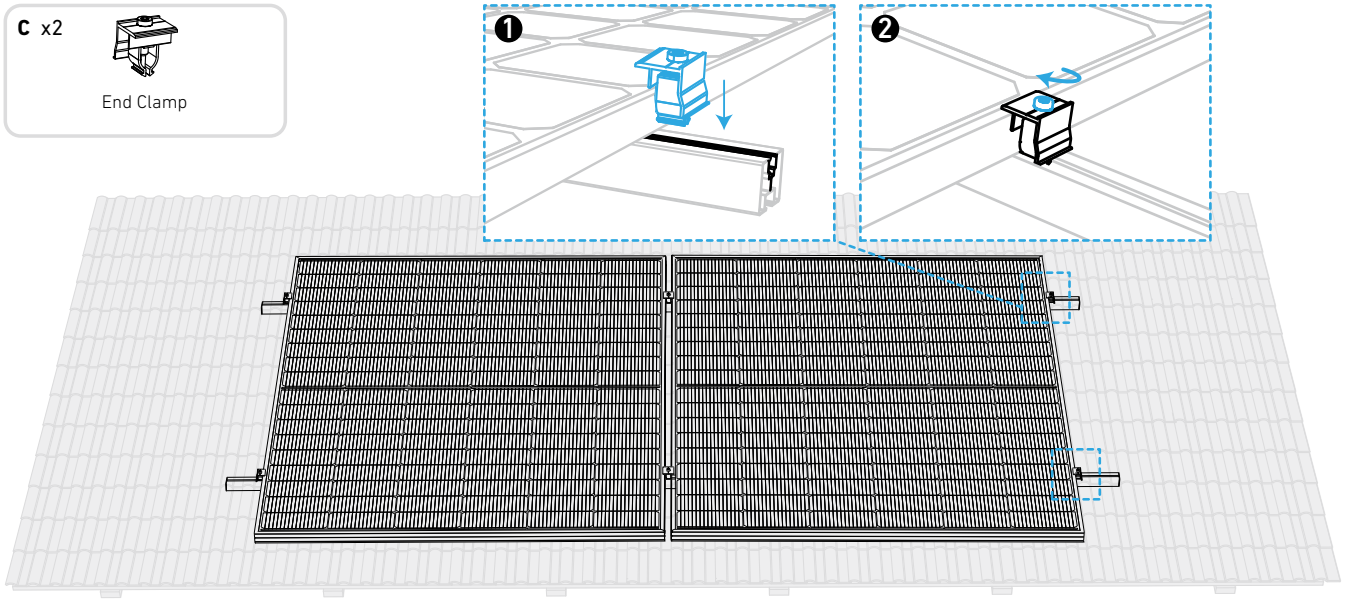

8. Press the rail caps into the rail ends.

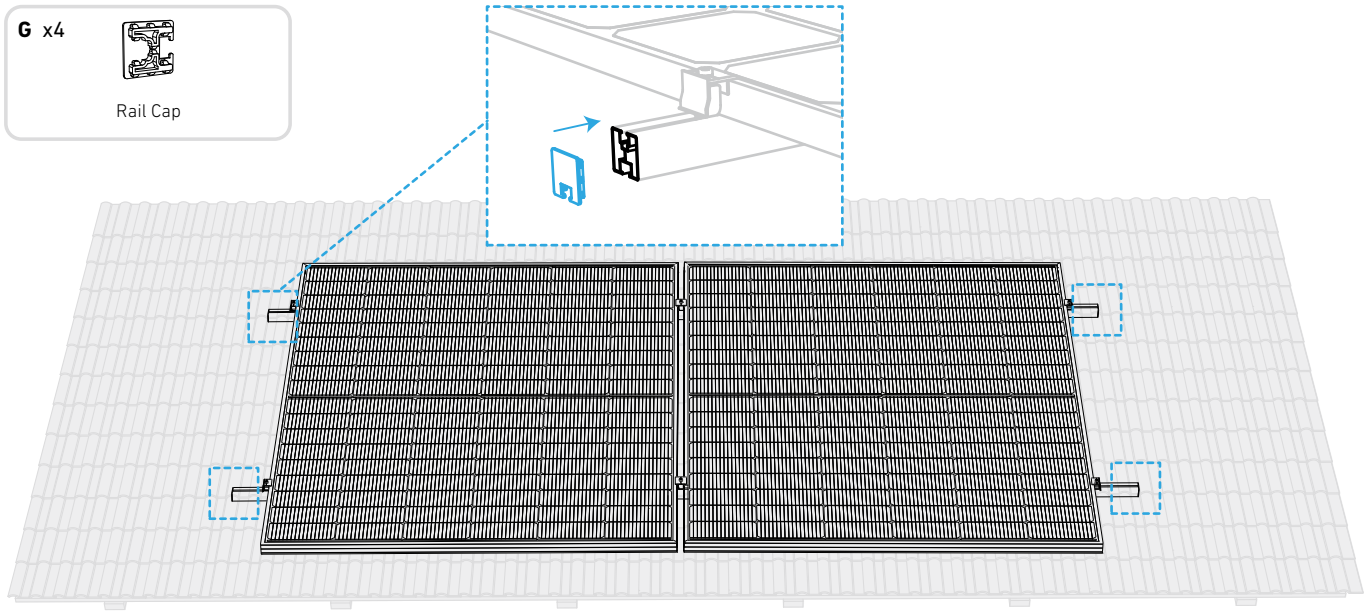

Anker SOLIX Solar Panel Mount for Pitched Bitumen and Metal Roof Installation



ANKER SOLIX

Components Overview

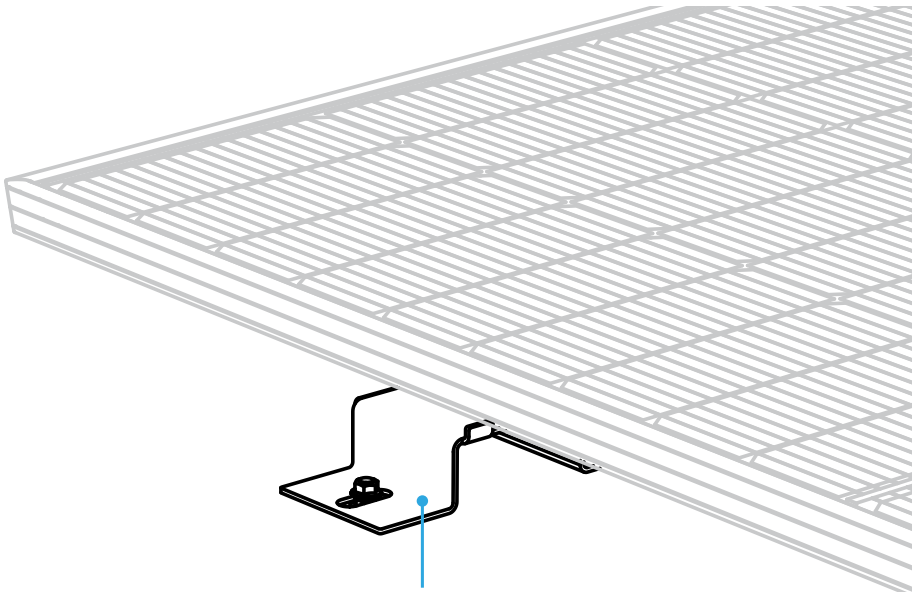

Installation

What You Need

A

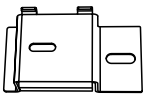

Component Support Base
(×8)

B



Rubber Pad 1 (60×10×2mm)
(×8)

C

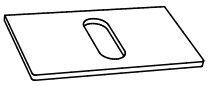

Rubber Pad 2 (60×36×2mm)
(×8)

D



M6 14mm Flange Bolt
(×8)

E



M6 Flange Nut
(×8)

F

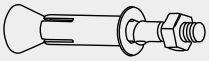

SUS304 Expansion Bolt
(×8)

G

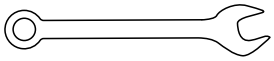

Wrench

H

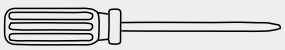

Screwdriver

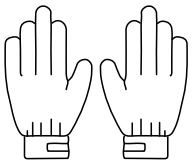

Work Gloves
(Not included)

1. Place the rubber pads onto the component support bases.

A x4

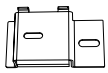

Component Support Base

B x4



Rubber Pad 1 (60×10×2mm)

C x4

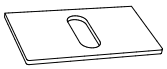

Rubber Pad 2 (60×36×2mm)

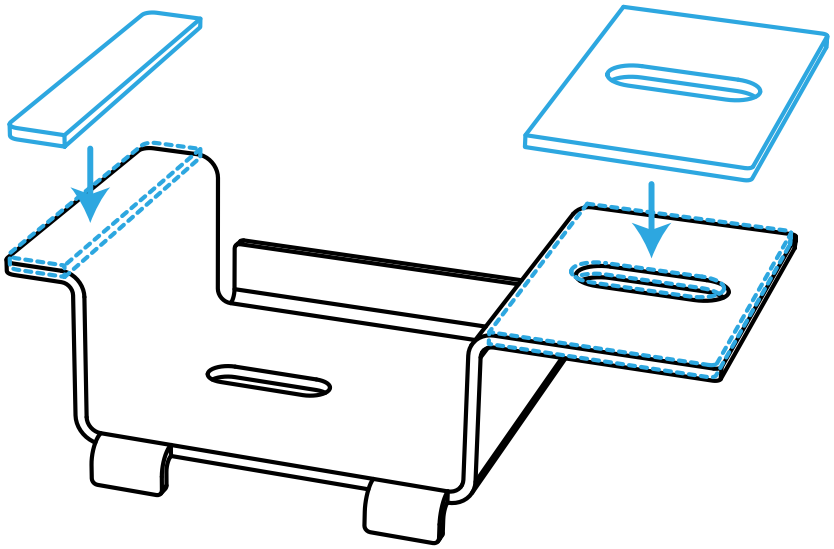

2. Secure the component support bases to the solar panel with M6 × 14mm Flange bolts and M6 Flange nuts.

A x4

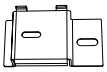

Component Support Base

D x4



M6 14mm Flange Bolt

E x4



M6 Flange Nut

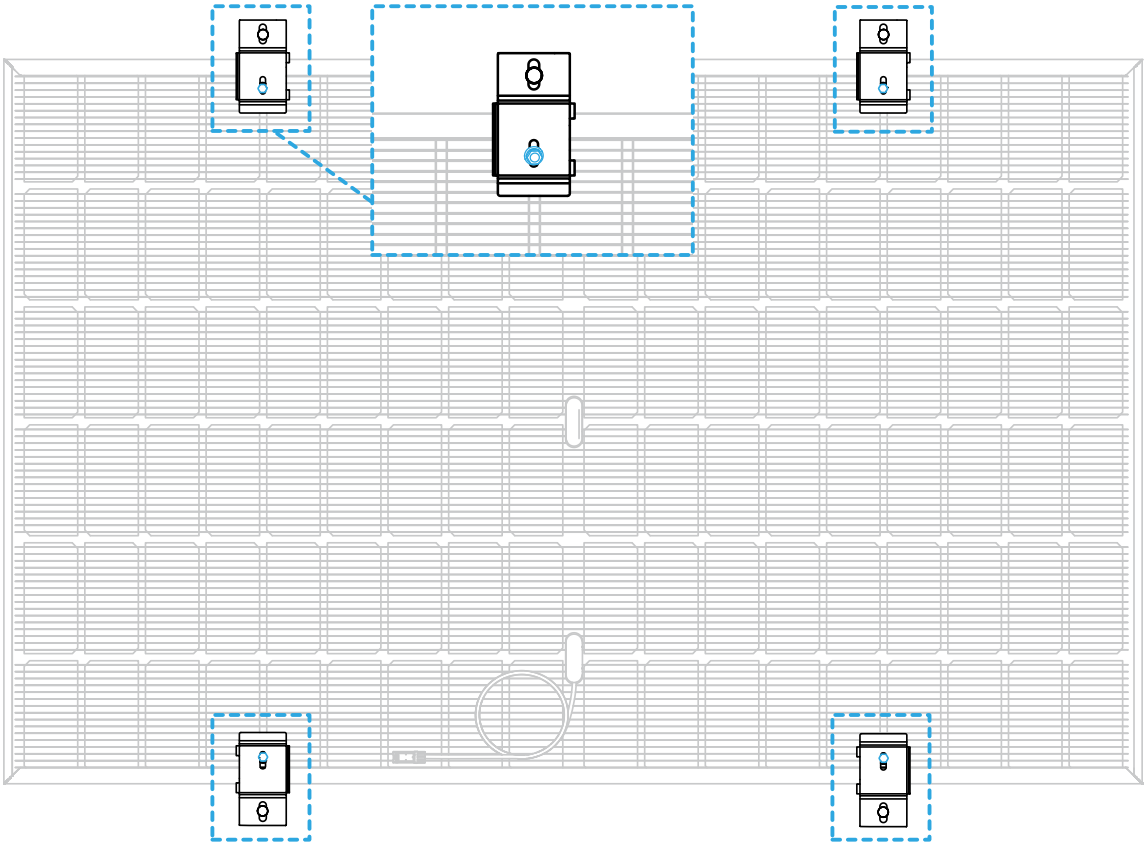

3. Secure the component support bases and solar panel on the roof with SUS304 Expansion Bolts.

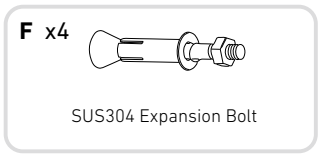

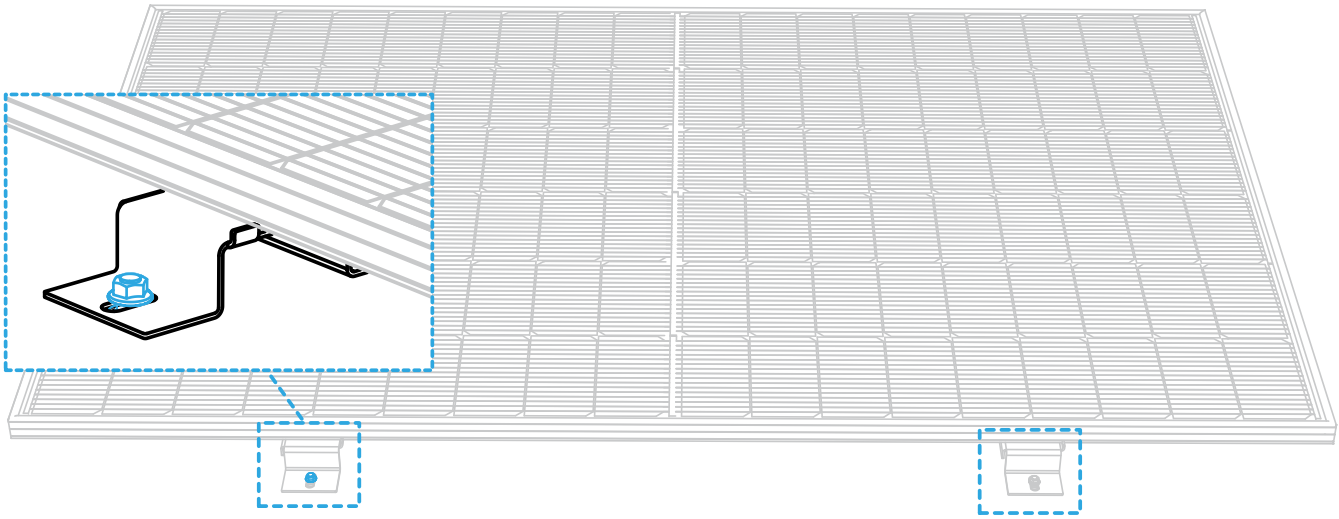

4. Repeat the steps above to install another solar panel.

Anker SOLIX Solar Panel Mount for Balcony Installation



ANKER SOLIX

• Ensure the solar panel extends over the balcony railing.
• Solar system modules weigh 52.5kg, so ensure your balcony can support them before installing.

Components Overview

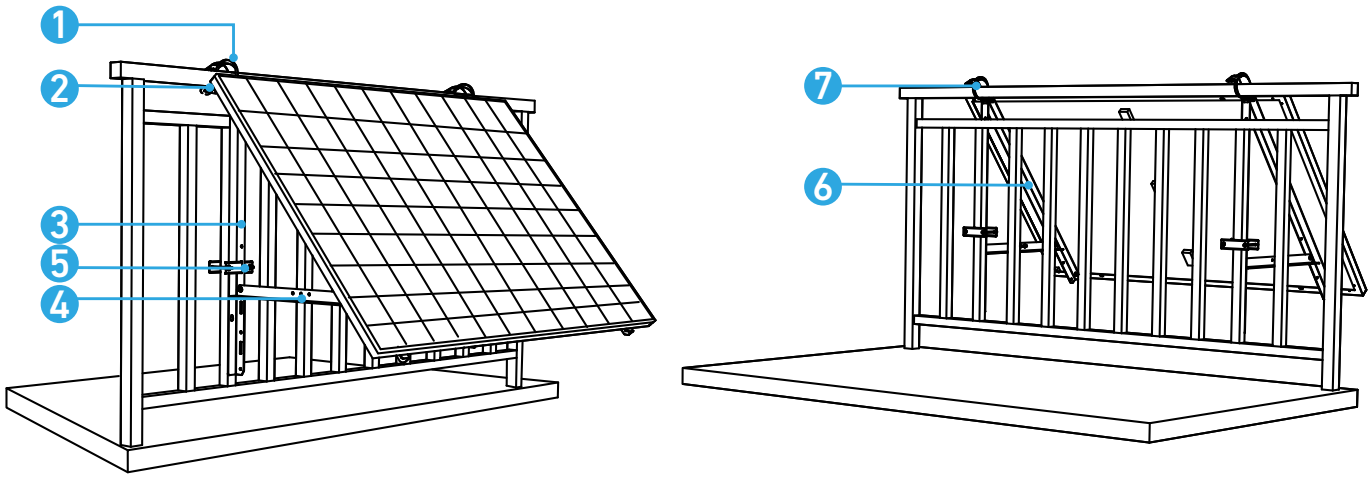

1. 304 Stainless Steel Hose Clamp
2. U-Shaped Rack
3. Vertical Support Beam
4. Lower Support Beam
5. Fastening Clamp
6. Solar Panel Support Beam
7. Silicone Buffer Pad

Installation

What You Need

A 1160 mm

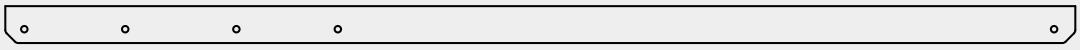

Solar Panel Support Beam (×2)

B 1006 mm

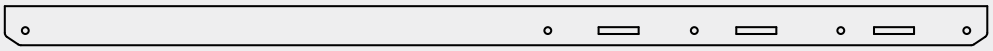

Vertical Support Beam (×2)

C 600 mm

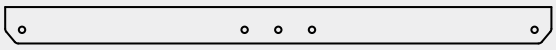

Lower Support Beam (×2)

D

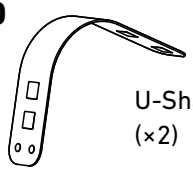

U-Shaped Rack
(×2)

E

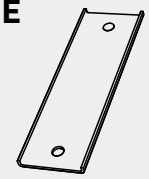

Fastening Clamp
(×4)

F



M6×100 Hexagon Flange Bolt
(×4)

G

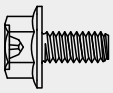

M6*14 Screws
(×17)

H

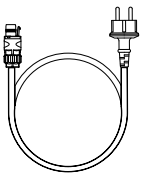

Schuko Connection
Cable

I



M6 Nut
(×21)

J

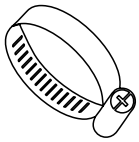

304 Stainless Steel
Hose Clamp
(×4)

K

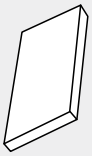

Silicone Buffer Pad
(×2)

L

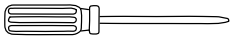

Screwdriver

M

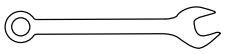

Wrench

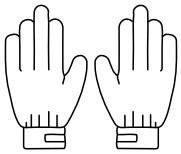

Work Gloves
(Not included)

1. Place the silicone buffer pads onto the U-shaped racks, then mount the U-shaped racks to the vertical support beams.

B x2 1006 mm



Vertical Support Beam

D x2



U-Shaped Rack

K x2

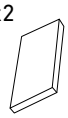

Silicone Buffer Pad

G x4



M6*14 Screws

I x4



M6 Nut

2. Mount the solar panel support beams on the solar panel.

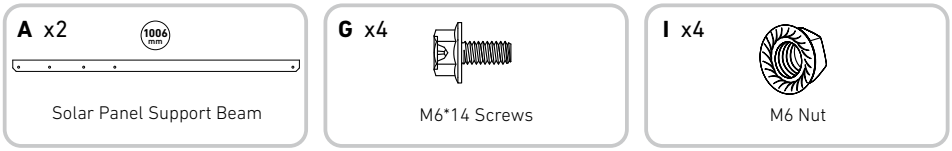

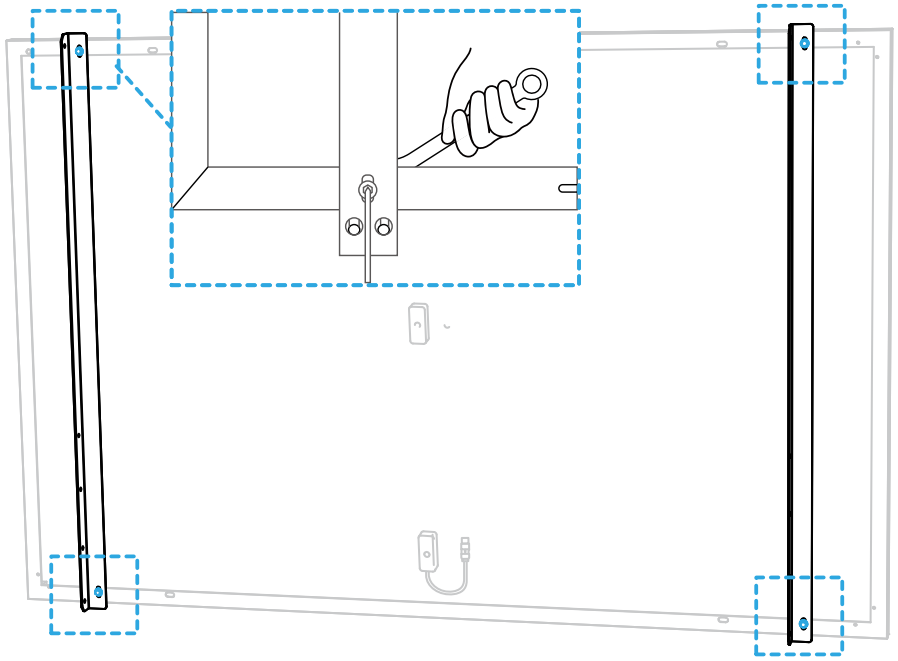

3. Install the vertical beams and solar panel support beams without tightening the screws.

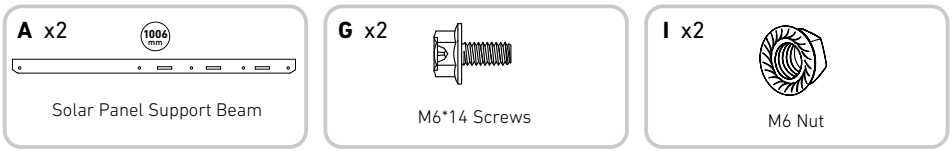

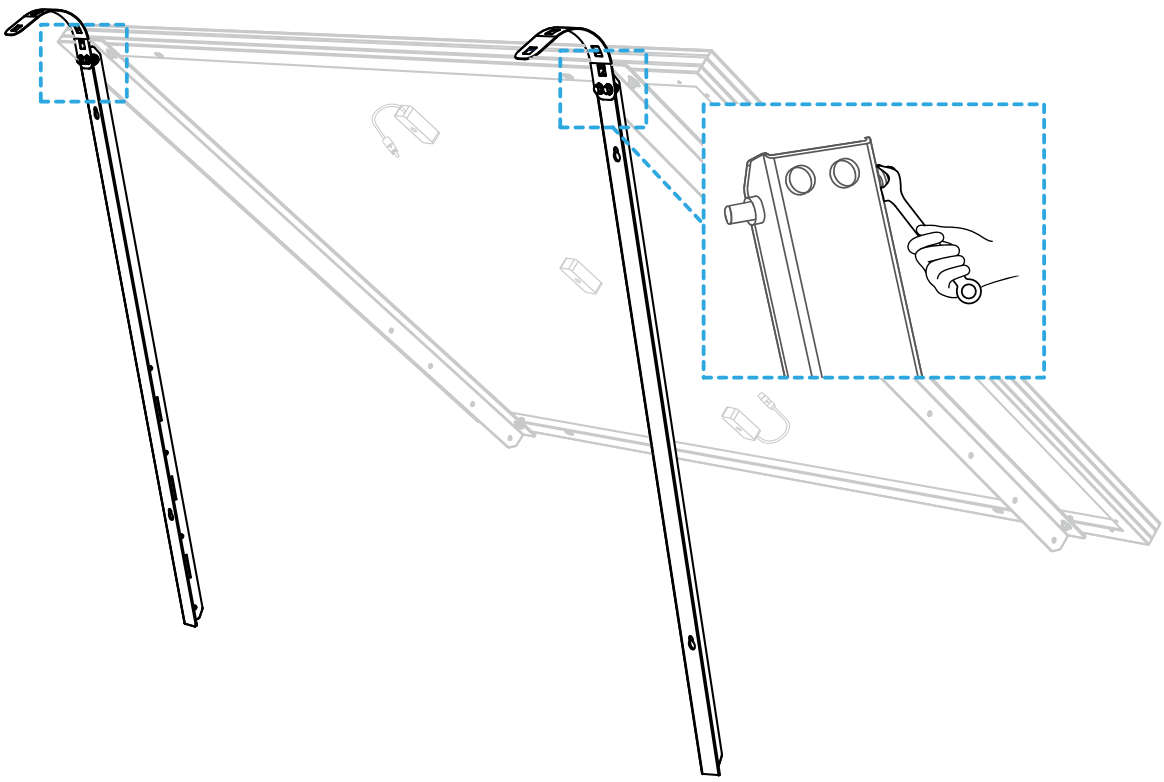

4. Munt the lower support beams and adjust the angle for maximum sunlight exposure.

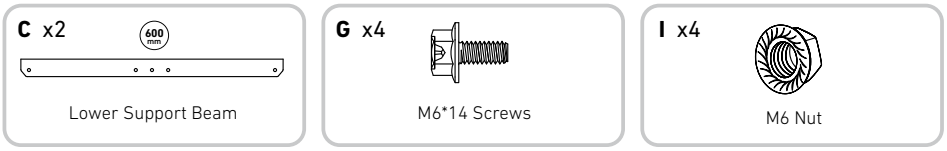

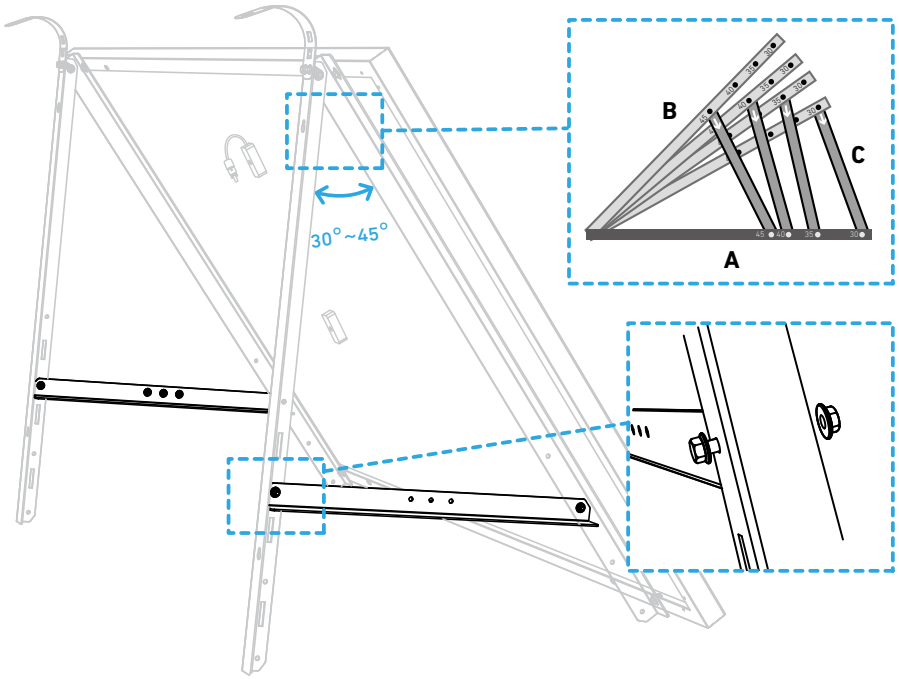

5. Tighten all the screws with 5N.m torque.

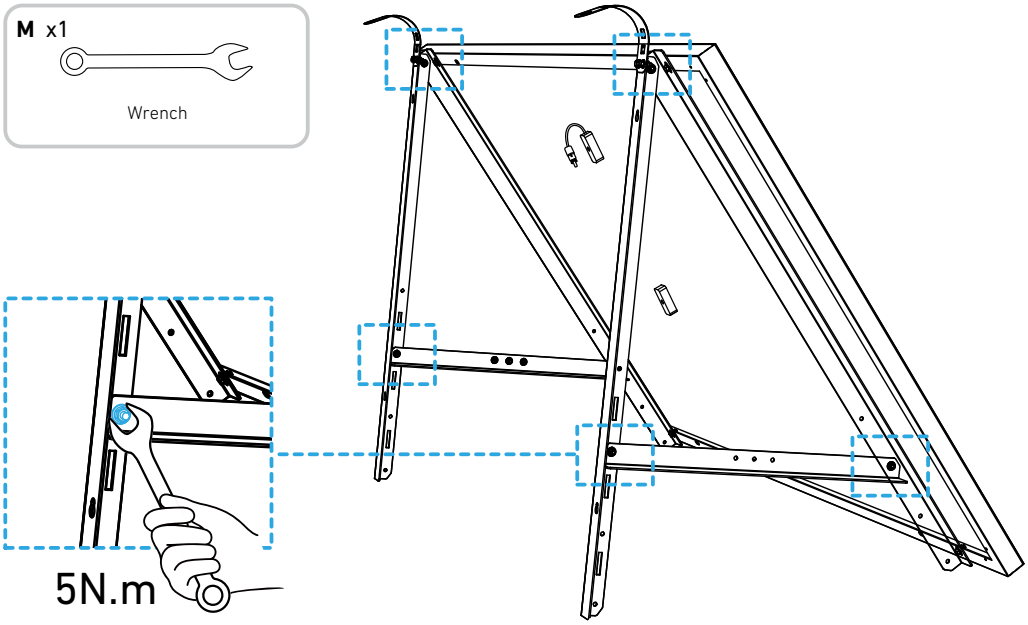

6. Hang the solar panel on the balcony railing and adjust the U-shaped racks manually to fit the shape of the balcony railing. Then, secure the U-shaped racks with stainless steel hose clamps.

Hold the solar panel until the U-shaped racks are firmly secured with stainless steel hose clamps. Avoid applying excessive pressure on the U-shaped racks because the paint surface may crack.

- To tighten, rotate the stainless steel hose clamps clockwise. To loosen, rotate the stainless steel hose clamps counterclockwise.
- At least 2 stainless steel hose clamps are needed to secure the brackets on one side.

J x2



304 Stainless Steel Hose Clamp

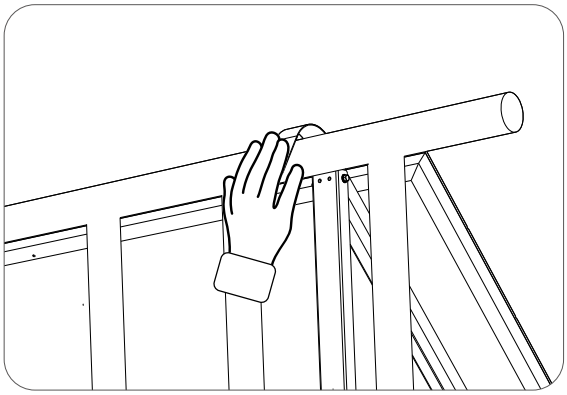

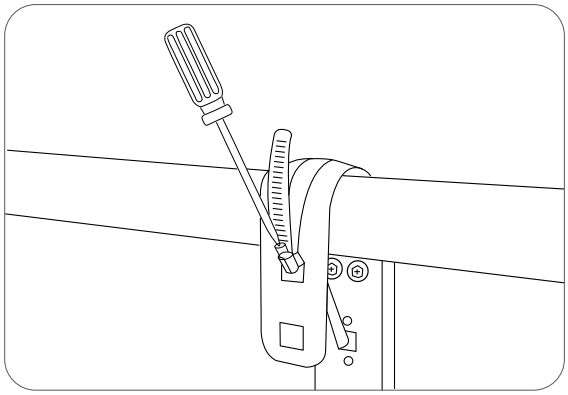

7. Install the solar panel's support brackets on the balcony railing, then secure them using fastening clamps or stainlesssteel hose clamps.

E x4

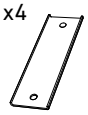

Fastening Clamp

F x4



M6×100 Hexagon Flange Bolt

I x4



M6 Nut

J x2



304 Stainless Steel Hose Clamp

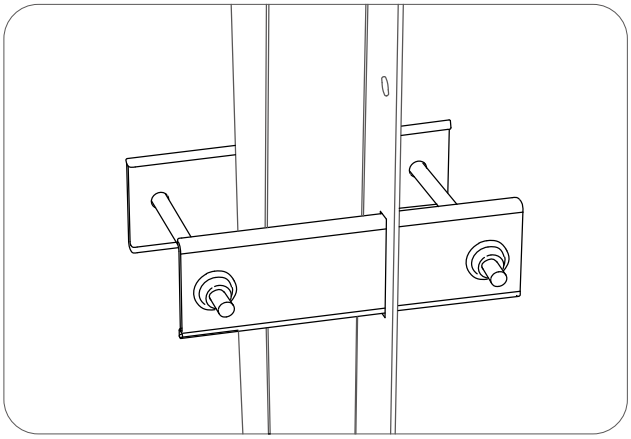

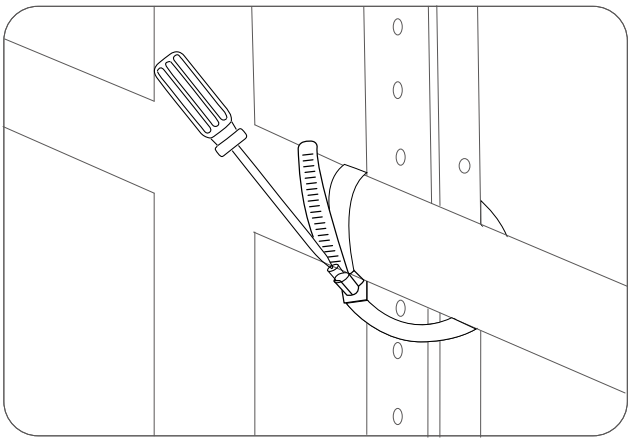

8. Install the microinverter to the lower support beams or anywhere else.

Note: The microinverter's front surface (with the Anker logo) should face outwards.

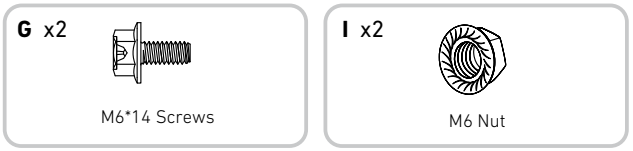

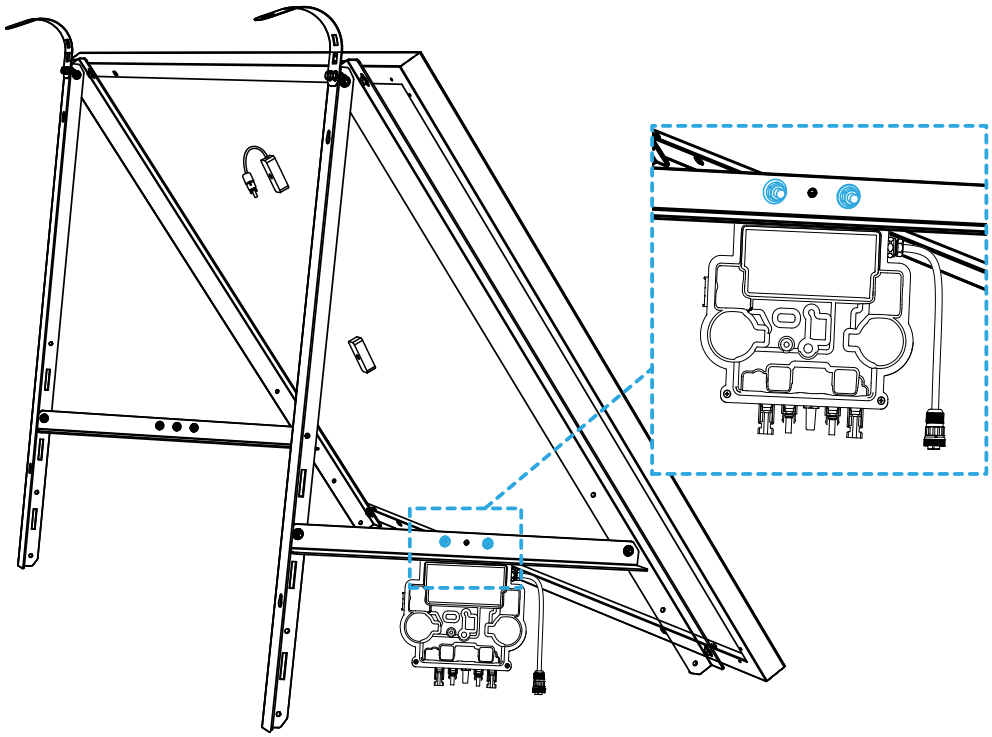

9. Repeat the steps above to install another solar panel.

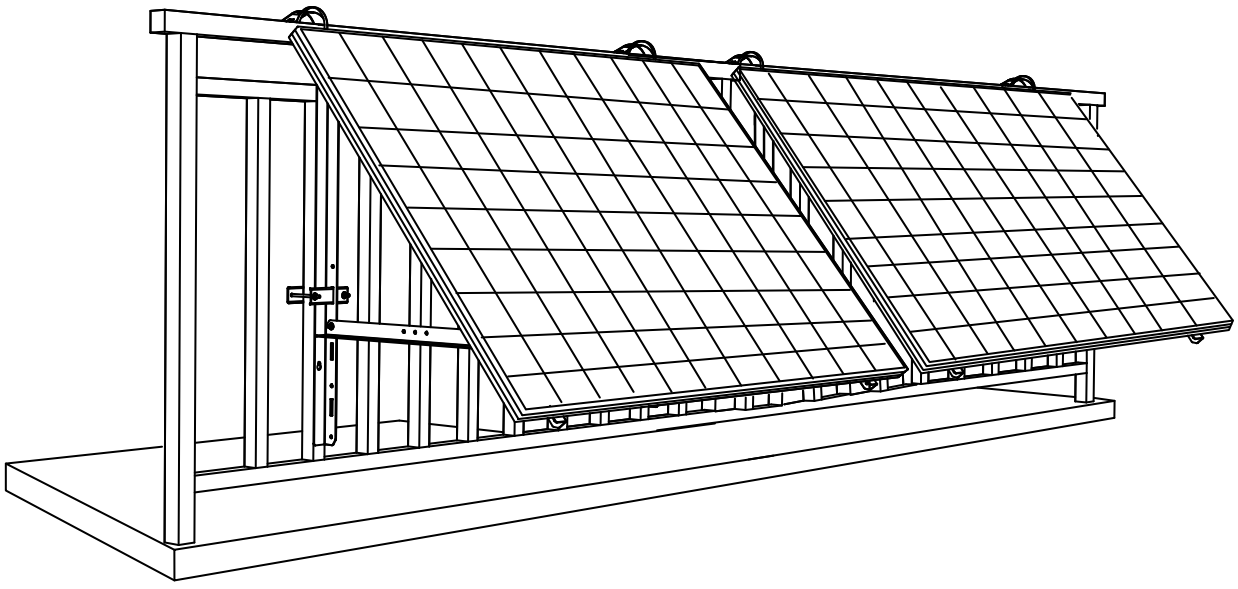

Anker SOLIX Solar Panel Mount for Wall Installation



ANKER SOLIX

Components Overview

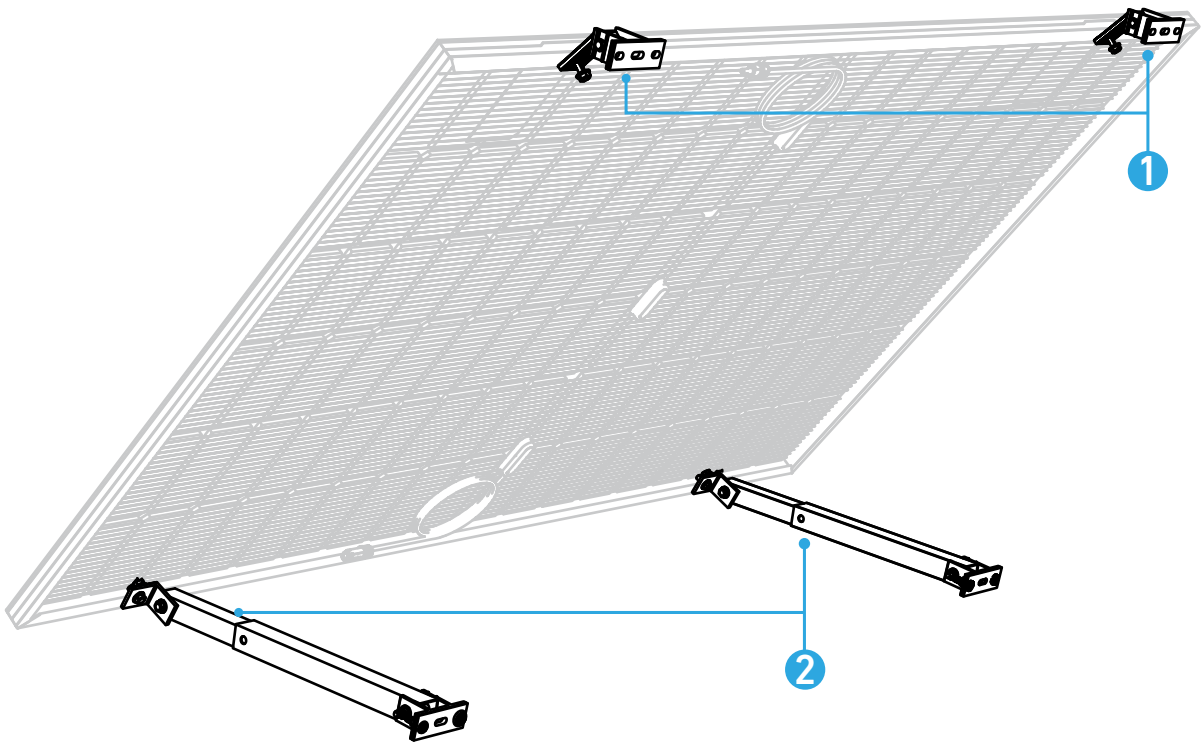

❶ Top Bracket
❷ Bottom Telescopic Bracket

Installation

What You Need

A

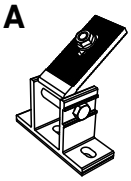

Top Bracket
(×4)

B

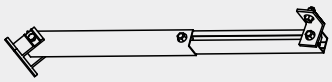

Bottom Telescopic Bracket
(×4)

C

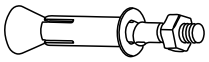

Expansion Bolt
(×16)

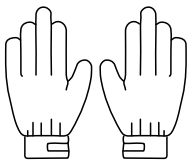

Work Gloves
(Not included)

1. Mount the top brackets and bottom telescopic brackets to the solar panel with screws.

A x2

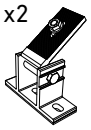

Top Bracket

B x2

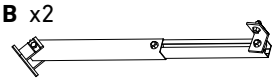

Bottom Telescopic Bracket

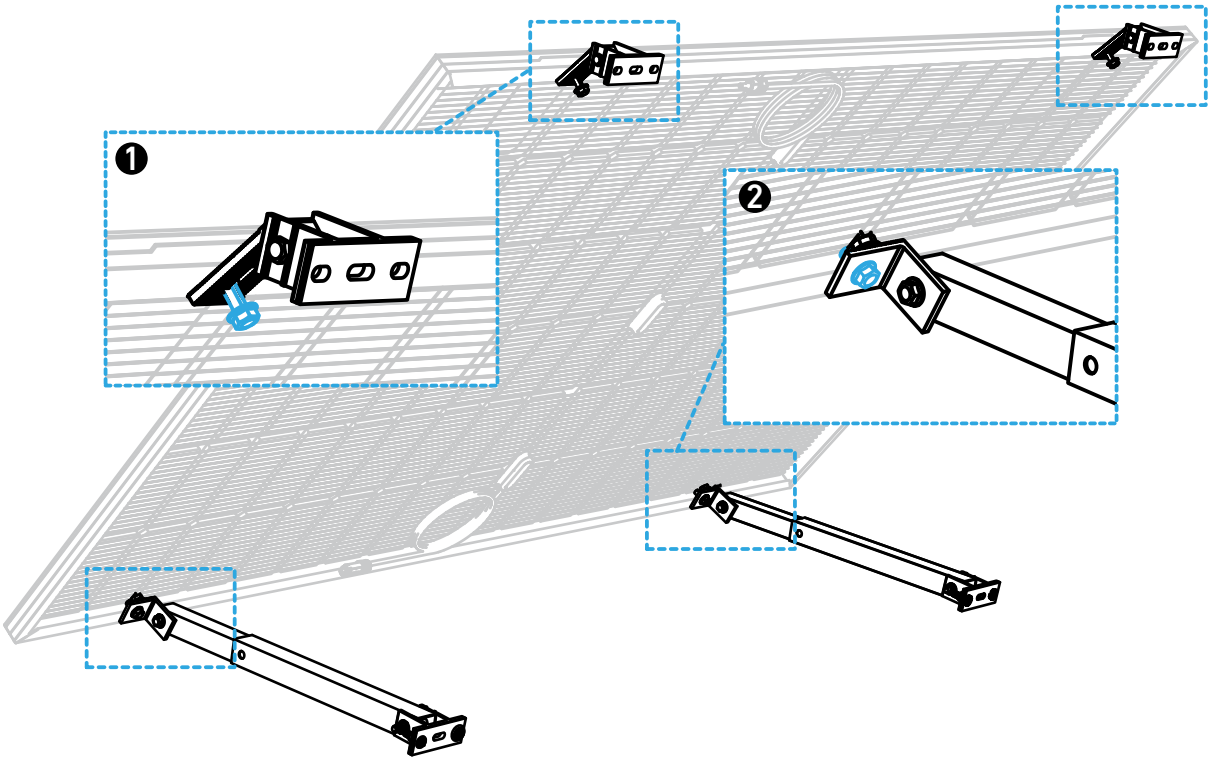

2. Secure the brackets and solar panel to the wall with expansion bolts.

C x8

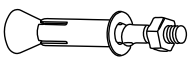

Expansion Bolt

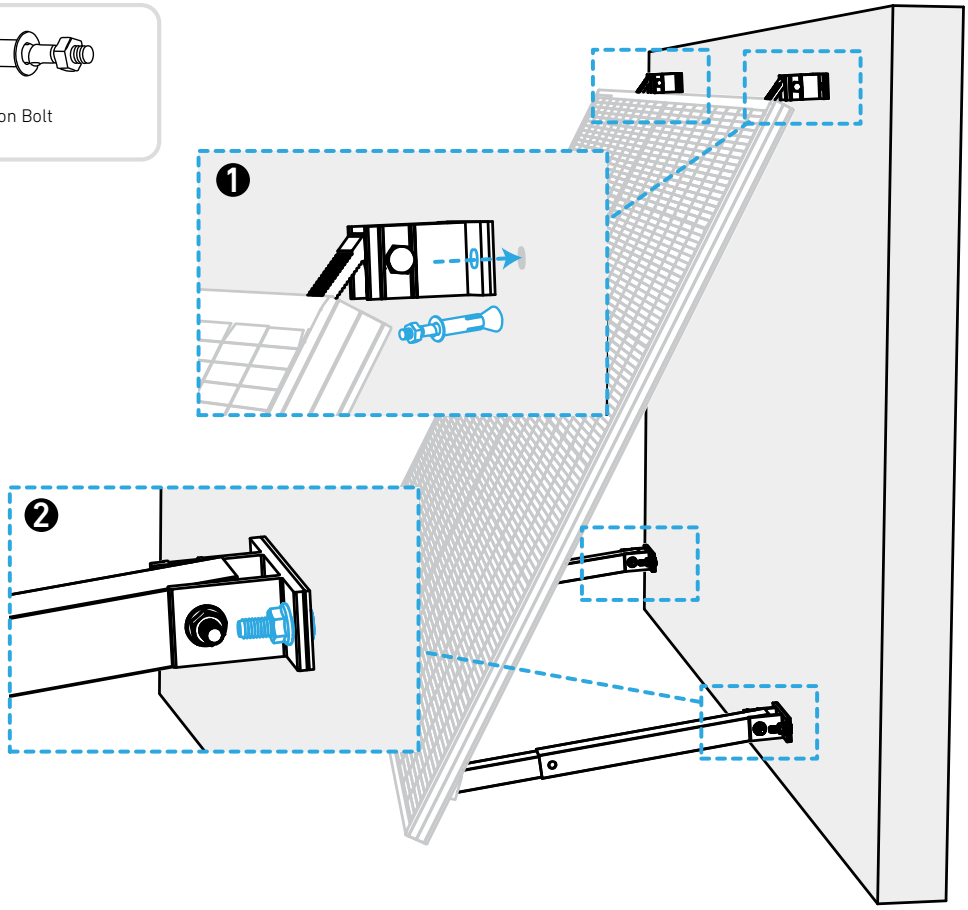

3. Adjust the bottom telescopic brackets to position the solar panel at the appropriate angle.

Note: Twist the screw to adjust the bracket length.

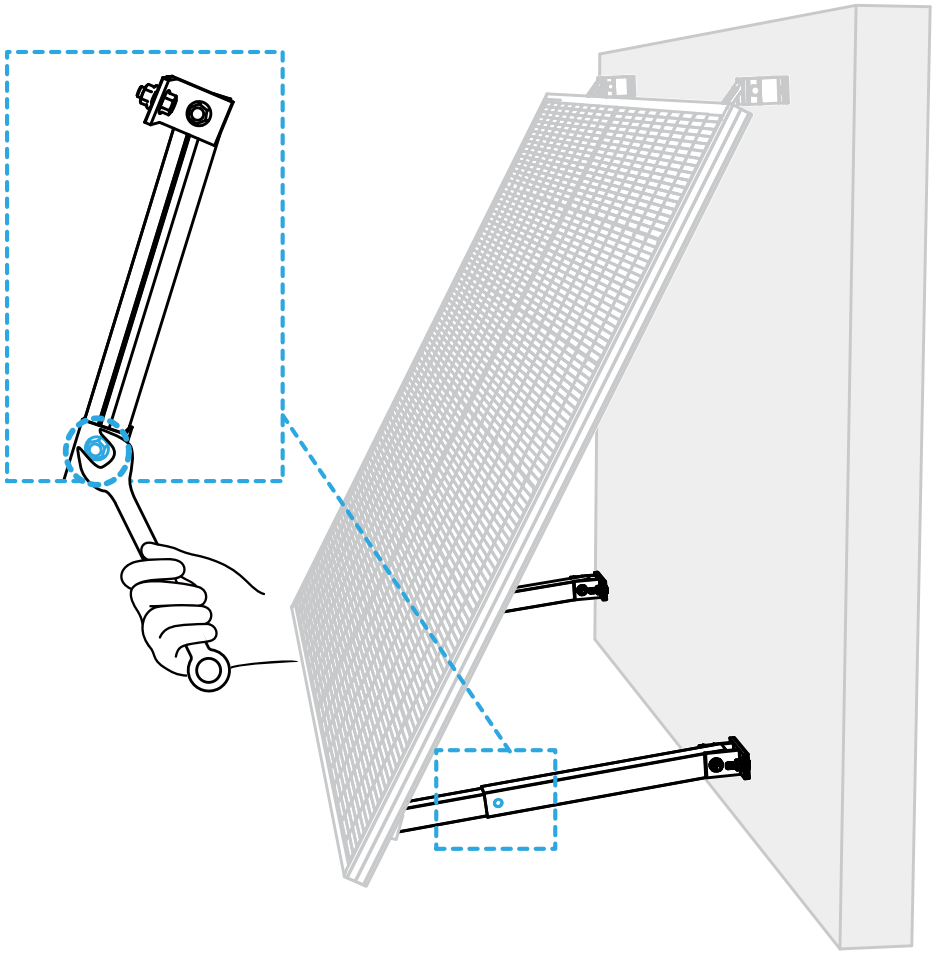

4. Tighten the screws on the bottom telescopic brackets to secure the angle.

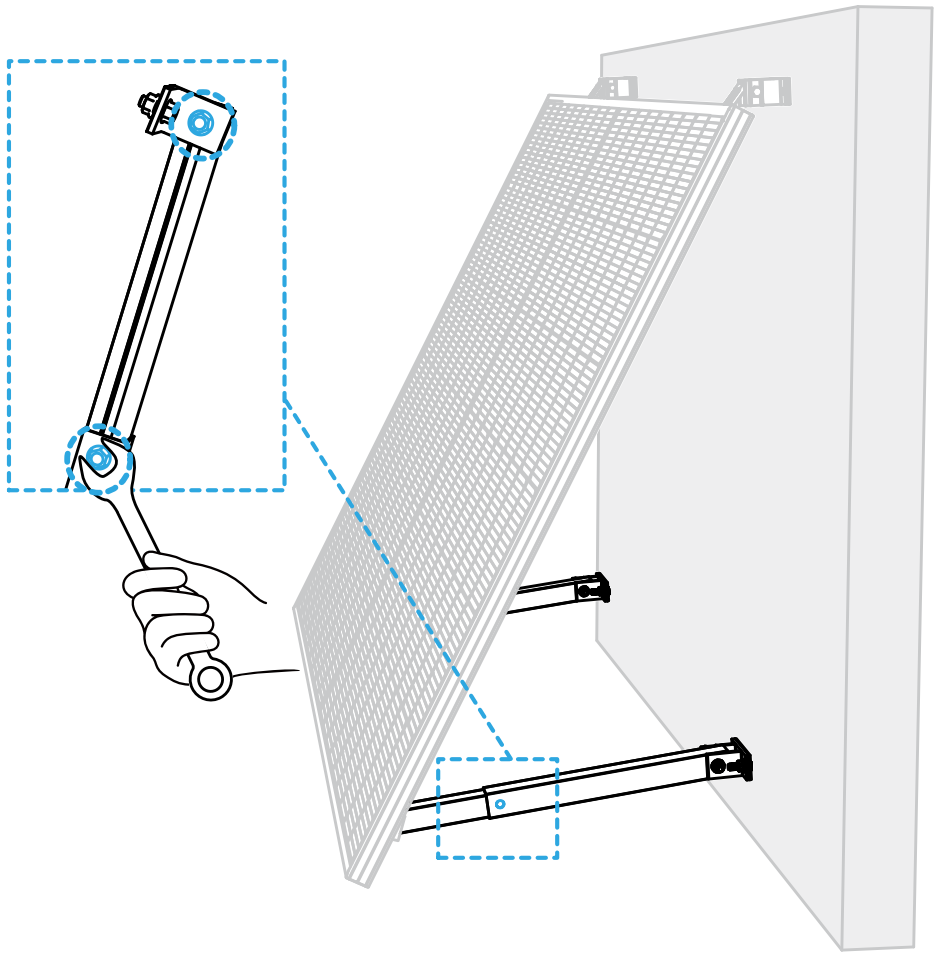

5. Repeat the steps above to install another solar panel.