RM2 Wireless Module for Yukon (PIM731)

Host connector

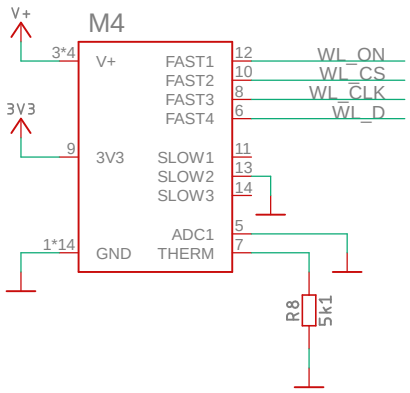

RM2 module

