## 1. About This Guide

1.1 Purpose and Scope

1.2 Related Solution Guide

1.3 Model Reference

## 2. Unboxing

2.1 Check Before Installation

2.2 What's in the Box

2.3 Optional Accessories

## 3. Product Overview

3.1 At a Glance

3.2 Screen Guide

3.3 Button Controls

3.4 LED Guide

## 4. Get Started

4.1 Position the smart generator

4.2 Remove Maintenance Cover

4.3 Connect Starter Battery

4.4 Add Engine Oil

4.5 Install Maintenance Cover

## 5. Add Fuel

5.1 Use Gasoline

5.2 Use LPG / Propane

5.3 Use Natural Gas

5.4 Check before Each Use

## 6. Device Setup

6.1 Power On and Select Fuel Type

6.2 Enable Networking Mode

6.3 Use the Anker App

## 7. Engine Operation

7.1 Electric Start-Stop

7.2 App Start-Stop
7.3 Manual Start
7.4 Auto Start-Stop
**8. Power Your Devices**
8.1 AC Powering
8.2 DC Powering
**9. Power Off**
**10. Maintenance**
10.1 Precautions
10.2 Maintenance Schedule
10.3 App Reminders
10.4 User Maintenance Tasks
Check Generator Position
Replace the Engine Oil
Clean the Air Filter
Clean and Adjust the Spark Plug
Clean the Spark Arrestor
Clean the Fuel Filter
**11. Specifications**
**12. Safety Information**
12.1 Labels and Nameplate
12.2 Important Safety Instructions
**13. Appendices**
Appendix 1. Circuit Diagram
Appendix 2. Generator Exercise Mode
Manual Exercise
Regular Exercise
Appendix 3. Starter Battery Replacement
Appendix 4. Storage and Transportation
Appendix 5. Troubleshooting
Appendix 6. Use with Anker SOLIX Portable Power Station

# 1. About This Guide

## 1.1 Purpose and Scope

This guide provides step-by-step instructions for learning, operating, and maintaining your Anker SOLIX Smart Generator 5500 (Tri-Fuel).

## 1.2 Related Guide

Refer to the following section of the E10 System and App Guide for the related application scenario.

| Application Scenario | Section |
| --- | --- |
| Use with Anker SOLIX E10 | Range-Extended Backup System (A17E1, A7320) |

## 1.3 Model Reference

| Model | Product Name | Shortened Form |
| --- | --- | --- |
| A7320 | Anker SOLIX Smart Generator 5500 (Tri-Fuel) | Smart Generator |
| A17E1, A17E1141-85 | Anker SOLIX E10 | E10 |

# 2. Unboxing

## 2.1 Check Before Installation

### Inspect the Outer Packaging

Before unpacking, inspect the outer packaging for holes, cracks, or other damage, and verify the equipment model number.

If any damage is found or the model does not match your order, do not unpack the equipment. Contact customer support immediately.

### Verify Contents

After unpacking, check that all items are intact and complete, and free from any obvious damage. If any item is missing or damaged, please contact customer support.

## 2.2 What's in the Box

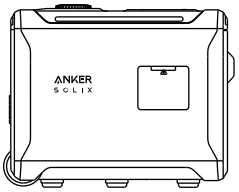

Anker SOLIX Smart Generator 5500 (Tri-Fuel)



Spark Plug Socket



Breaker Bar

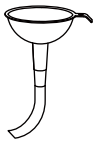

Oil Funnel

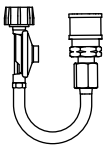

Propane Tank Hose (4.3 ft / 1.3 m)

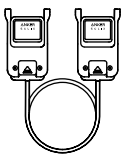

DC Charging Cable (9.8 ft / 3 m)

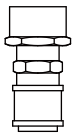

Natural Gas Adapter

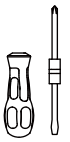

2-in-1 Screwdriver



Documents

## 2.3 Optional Accessories

The following accessories can be ordered separately.



**Anker SOLIX Smart Generator Starter Battery**

Used when the existing battery inside the smart generator requires replacement.

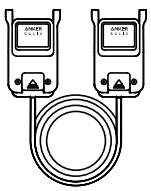

**Anker SOLIX Smart Generator DC Charging Cable (32.8 ft / 10 m)**

Connects the smart generator and the power module when they are located far apart.

# 3. Product Overview

## 3.1 At a Glance

### Front and Rear Views

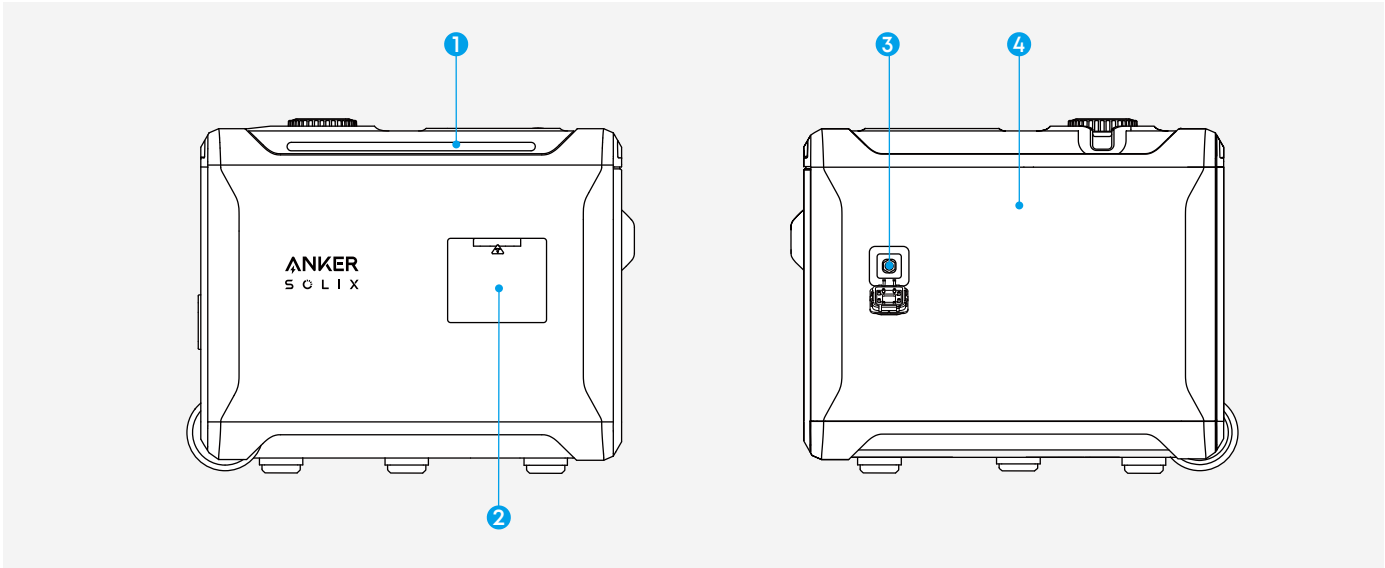


1 Light Bar
2 Recoil Starter Grip
3 Liquefied Petroleum Gas (LPG) / Natural Gas (NG) Inlet
4 Maintenance Cover

### Side Views

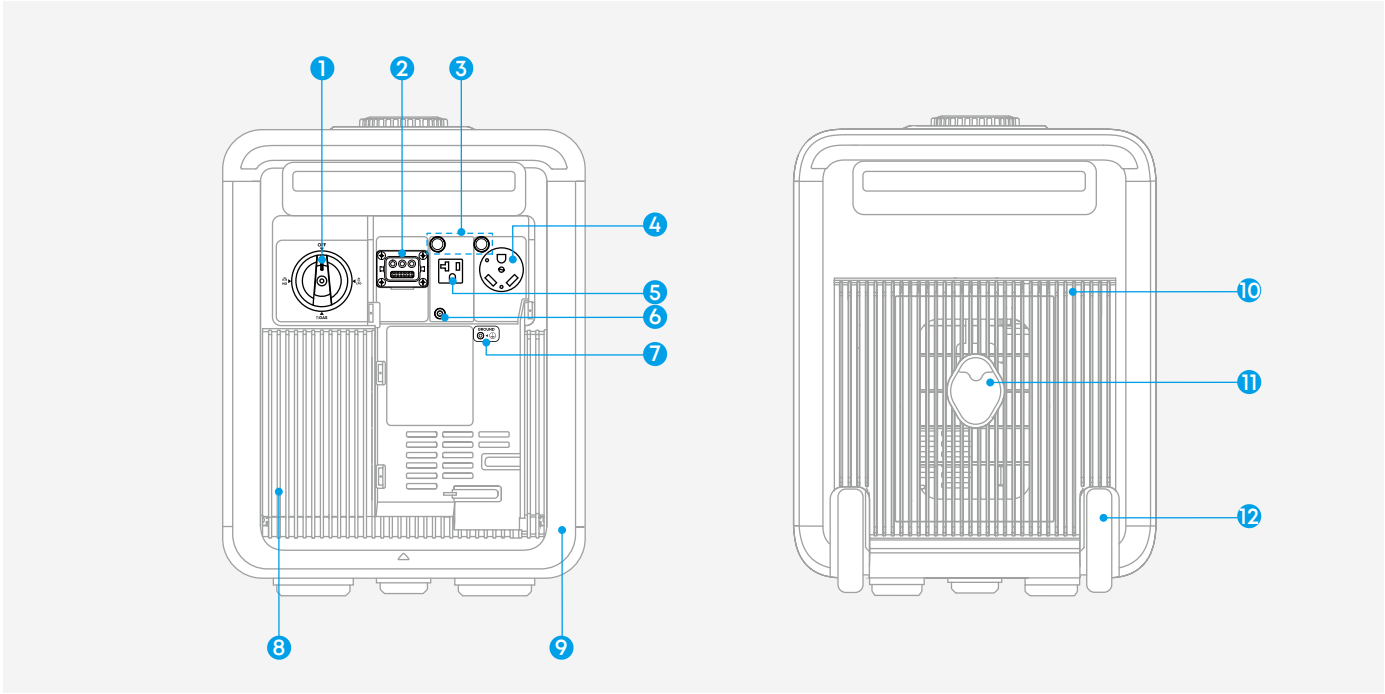


1 Engine Switch
2 DC Output Port*
3 Thermal Protector Reset Buttons
4 NEMA TT-30R AC Output Port**
5 5-20R AC Output Port**

6 Charging Port for Starter Battery***
7 Ground Terminal
8 Air Inlet
9 Handle
10 Air Outlet
11 Muffler / Spark Arrestor
12 Wheels

***System Floating**: The DC circuit is isolated from the smart generator frame. The positive and negative terminals are not connected to the ground. This configuration helps prevent electric leakage.

****Neutral Floating**: The smart generator (stator winding) is isolated from the frame and from the AC receptacle ground pin. Electrical devices requiring a grounded receptacle pin connection will not function if the receptacle ground pin is not functional.

*****Battery Adapter**: Use a certified adapter with a DC output of 12V, a minimum power rating of 45W, and a DC5521 port.

## Top View

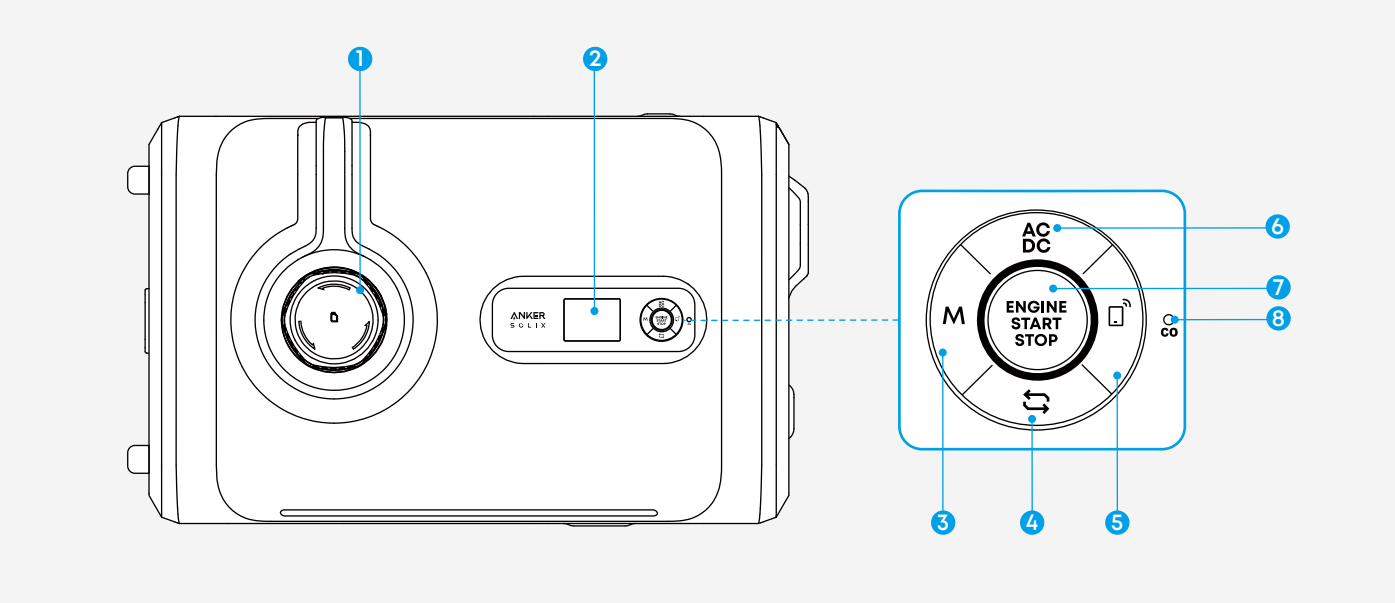


1 Gasoline Inlet
2 Screen Display
3 Mode Switch Button
4 Screen Switch Button
5 IoT Button
6 AC / DC OutputSwitch Button
7 Engine Start / Stop Button
8 Carbon Monoxide Alert Light

### Internal View

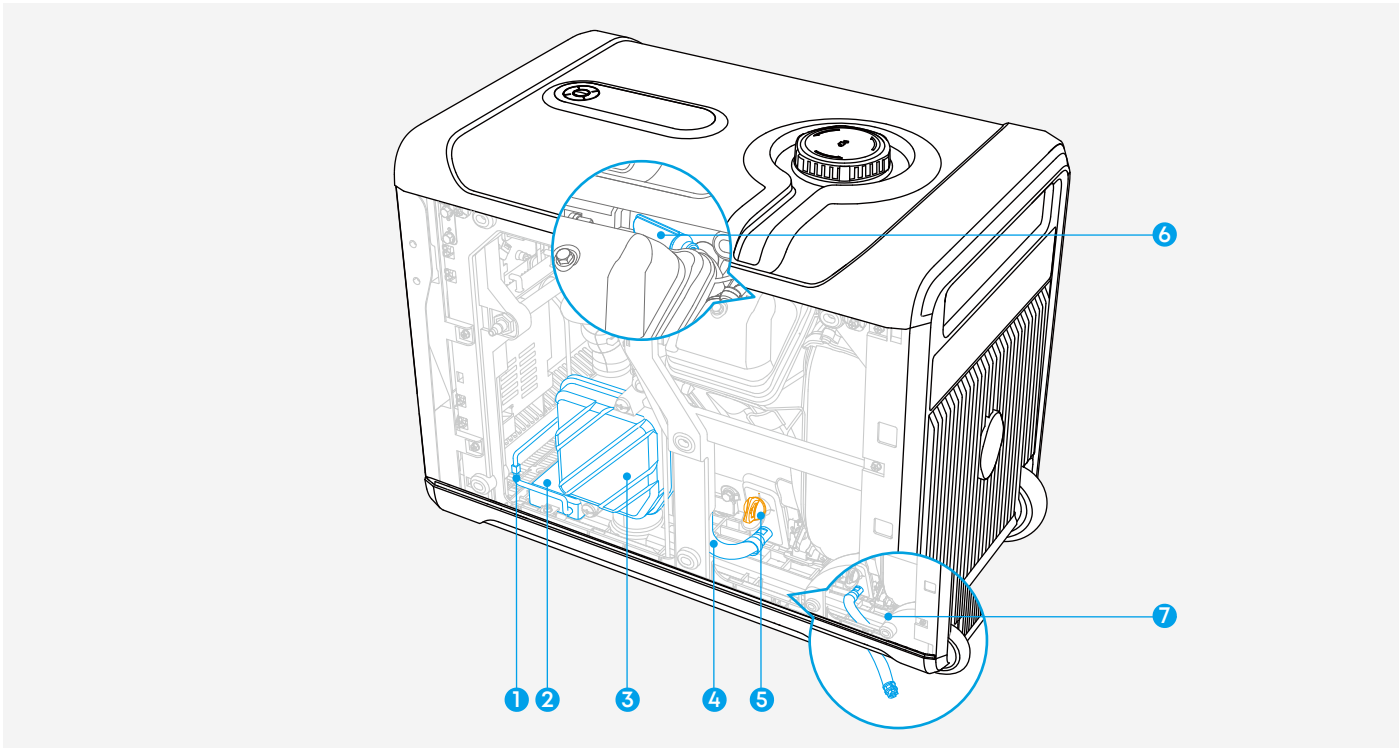


1. Starter Battery Connectors
2. Starter Battery
3. Air Filter
4. Engine Oil Drain Hose
5. Engine Oil Cap / Dipstick
6. Spark Plug
7. Oil Drain

## 3.2 Screen Guide

Screen display may vary by firmware version.

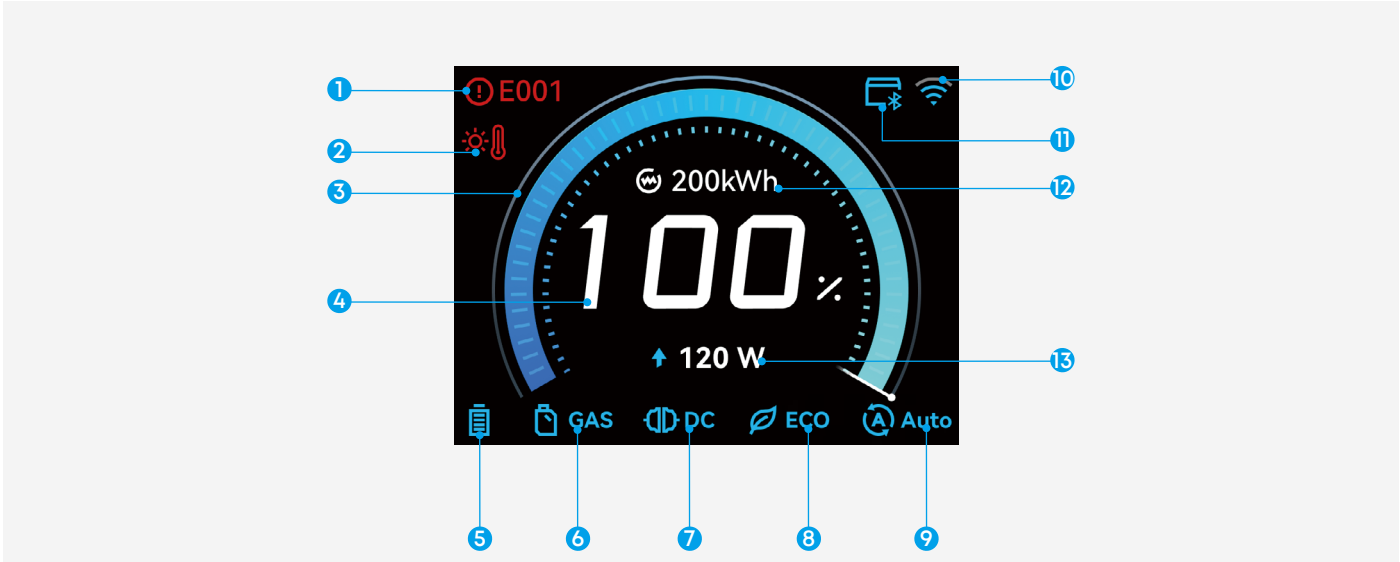

| No. | Indicator | Description |
| --- | --- | --- |
| 1 |  | **Error Code**<br>An error has occurred. For troubleshooting, refer to the Anker app or “Appendix 5. Troubleshooting”. |
| 2 |  | **Overtemperature Alert**<br>Stop operation and move the smart generator to a well-ventilated area. |
| 3 |  | **Fuel Level Ring**<br>This icon shows full level when NG is used. |
| 4 |  | **Fuel Level**<br>You can set the measurement unit for LPG and gasoline in the app. This icon shows 100% when NG is used. |
| 5 |  | **Starter Battery Level**<br>· Blue: Normal<br>· Red: Low<br>· Green: Charging |
| 6 |  | **Fuel Source**<br>· Gasoline<br>· LPG<br>· NG |
| 7 |  | **Output Mode**<br>· AC Mode<br>· DC Mode |
| 8 |  | **Operation Mode**<br>· ECO Mode<br>· Turbo Mode<br>· Quiet Mode |
| 9 |  | **Start-Stop Mode**<br>· Start by SOC<br>· Start by Time<br>· Manual Start-Stop<br>· Auto Start-Stop |

| | | |
|---|---|---|
| ⑩ |  | **Bluetooth Status**<br>· Flashing white: connecting to Bluetooth.<br>· Solid blue: connected to Bluetooth. |
| |  | **Wi-Fi Status**<br>· Flashing white: connecting to Wi-Fi.<br>· Solid blue: connected to Wi-Fi. |
| ⑪ |  | **Connection Status**<br>The smart generator is connected to a compatible portable power station. |
| ⑫ | 18H 32M | **Remaining Running Time (AC Mode)**<br>Displays the estimated remaining running time based on the current fuel level. This icon shows "∞ Time" when NG is used. |
| | 200kWh | **Estimated Output from Remaining Fuel (DC Mode)**<br>Displays the estimated output based on the current fuel level. This icon shows "∞ kWh" when NG is used. |
| ⑬ | 120 W | **Output Power**<br>Indicates the current total output power. |
| | Warming | **Generator Warming Up**<br>This icon displays during the smart generator warm-up phase. |
| | ⚠ OVERLOAD | **Overload Alert**<br>Reduce the load immediately by disconnecting the connected devices. |

## 3.3 Button Controls

### Thermal Protector Reset Button

| Button | Action | Function |
|---|---|---|
| 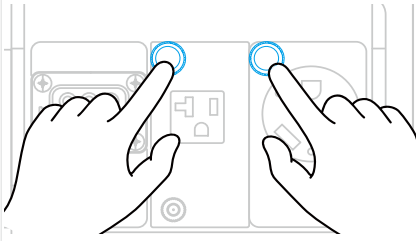 | Press once after cooling. | Restore AC output after the thermal protectors are triggered by overtemperature or overload. |

## Control Panel

When the smart generator remains inactive for 2 minutes, the display screen turns off automatically. To wake the screen, press any of the buttons below.

| Button | Action | Function |
|---|---|---|
| 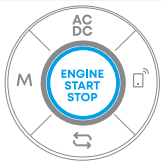 | Press for 2 seconds. | Start or stop the engine. |
| 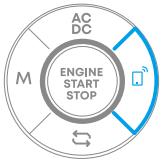 | Press once. | Confirm network connection. |
| | Press for 2 seconds. | Enable or disable network connection. |
| | Press for 7 seconds. | Unbind the smart generator from the app. |
| 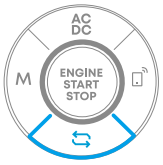 | Press once. | Cycle through the main and sub screens.<br>Each sub screen automatically returns to the main screen after 10 seconds of inactivity. |
| | Press for 3 seconds (on operational or health data screen). | Reset the displayed data.<br>Clear a fault alert or maintenance reminder.. |
| 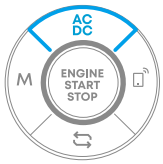 | Press once. | Switch between AC and DC modes. |
| 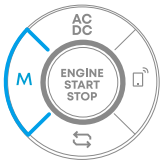 | Press once. | Change the operation mode.<br>· AC Output: ECO / Turbo<br>· DC Output: ECO / Turbo / Quiet |

## 3.4 LED Guide

### Carbon Monoxide (CO) Alert Light

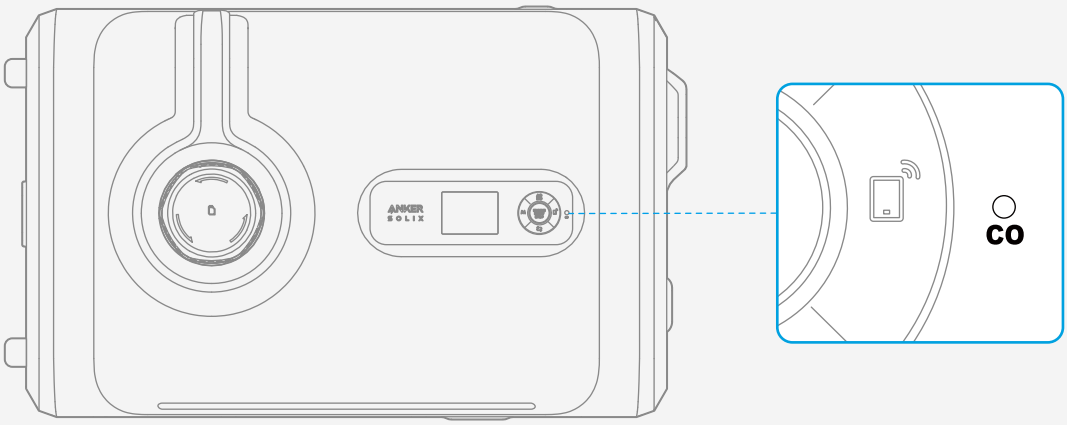


| LED | Status |
| --- | --- |
|  | **CO System Self-Testing after Power-On**<br>LED flashes yellow for 0.5 seconds. |
|  | **CO System Malfunctioning**<br>LED flashes yellow for more than 5 minutes. |
|  | **CO Alert Triggered**<br>LED flashes red for more than 5 minutes. |
|  | **CO Alert Cleared**<br>LED turns off. |

## Light Bar




| LED | Status |
| --- | --- |
|  | **Powered On**<br>Blue LED illuminates toward the center. |
|  | **Standby (with Display Screen On)**<br>LED turns light blue. |
|  | **Standby (with Display Screen Off)**<br>LED turns off. |
|  | **Powered Off**<br>Light Blue LED fades toward the center. |
|  | **Connecting to the Network**<br>Blue LED flashes |
|  | **Engine Running**<br>Blue LED moves from the center to both sides. |

| | |
|---|---|
| 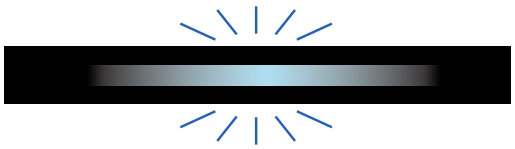 | **Engine Warming Up**<br>Light blue LED flashes. |
|  | **Excercising**<br>Blue LED lights from left to right in a sequential loop. |
|  | **Firmware Updating**<br>Blue LED runs from left to right. |
|  | **Fuel Insufficient**<br>Orange LED flashes. |
|  | **Malfunction**<br>Red LED flashes. |

# 4. Get Started

⚠ Before getting started, read all instructions in the section “12. Safety Information”.

## 4.1 Position the smart generator

### Outdoor Placement

· Only use the smart generator outdoors and far away from windows, doors, and vents.
· Point the engine exhaust away from people and buildings.
· Keep air inlet and outlet areas clear.
· Maintain at least 5 ft (150 cm) of clearance on all sides and above.
· Keep at least 5 ft (150 cm) away from flammable and combustible materials.
· Do not use the smart generator in damp or flooded areas. Keep the location dry and prevent water from draining toward the base.

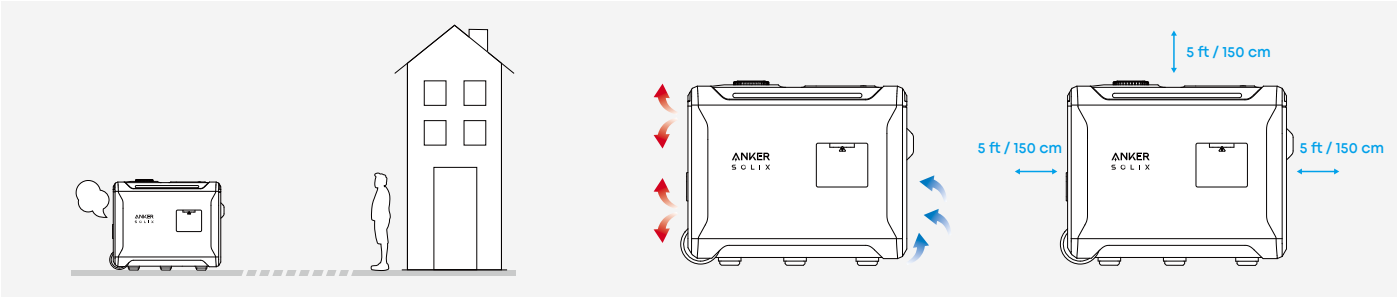

## Ground Surface

· Place the smart generator on a flat, hard, and rough surface.

· If the ground slope exceeds 4°, use anti-slip mats or sandbags to prevent movement.

· Suitable surfaces include leveled concrete or compacted gravel.

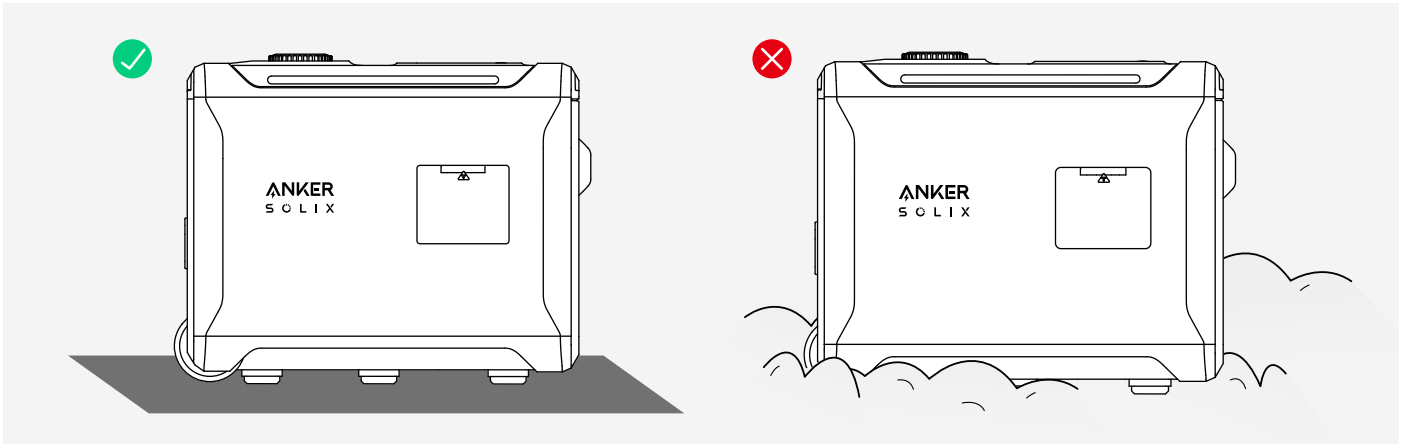


## Anti-theft Installation

If needed, secure the smart generator with a chain.

1. Tilt the smart generator gently to access the anti-theft hole near the base.
2. Pass the chain through the hole.
3. Return the smart generator upright and lock the chain.

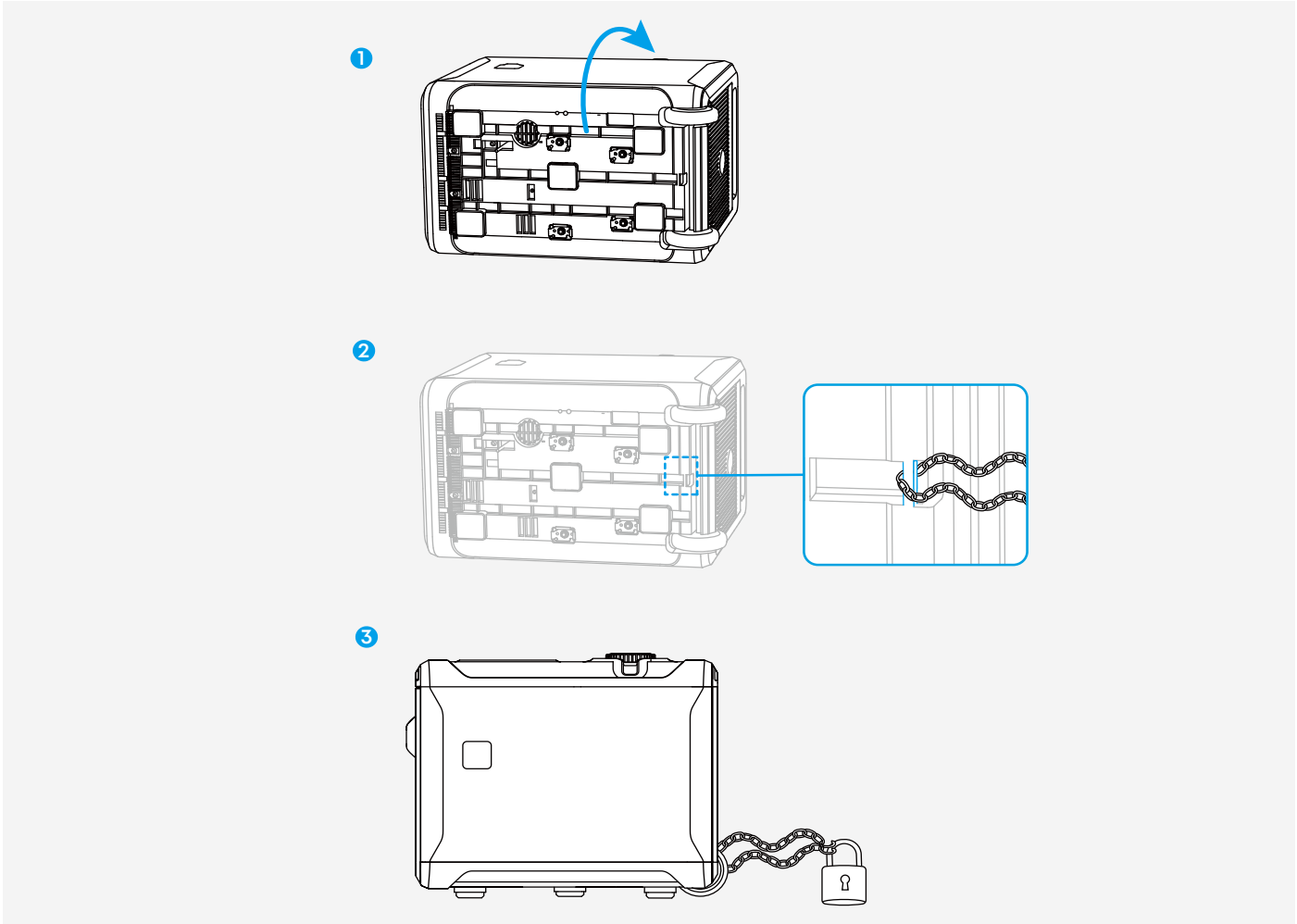

⚠ When tilting the smart generator, do not place it on the air inlet and outlet sides. Doing so may prevent it from starting and can cause engine oil leakage or equipment damage.

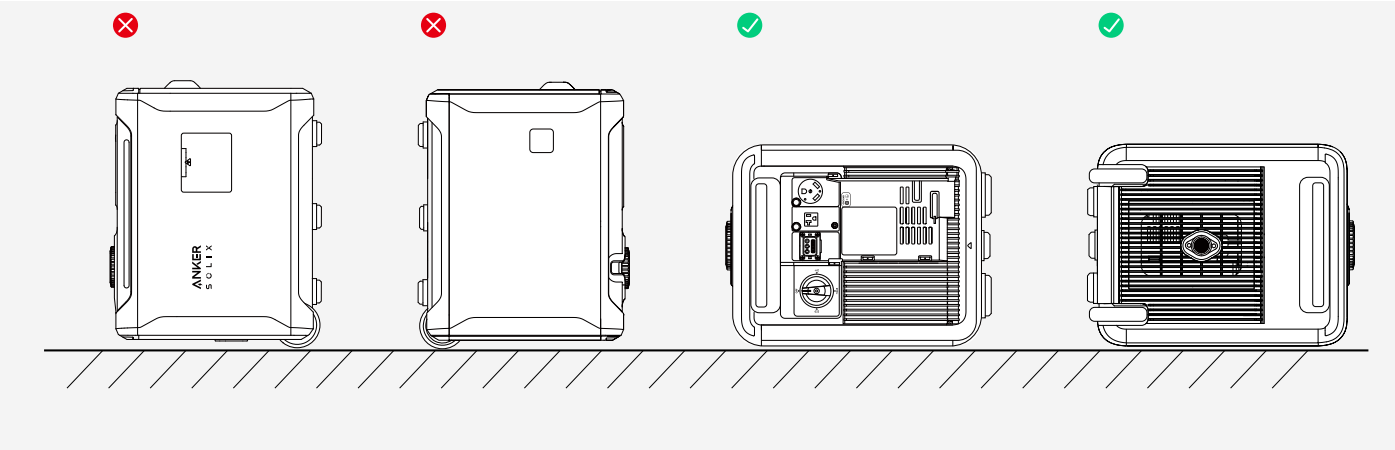

## 4.2 Remove Maintenance Cover

1. Lift the handle.
2. Loosen the screws on the maintenance cover.
3. Remove the cover and set it aside.

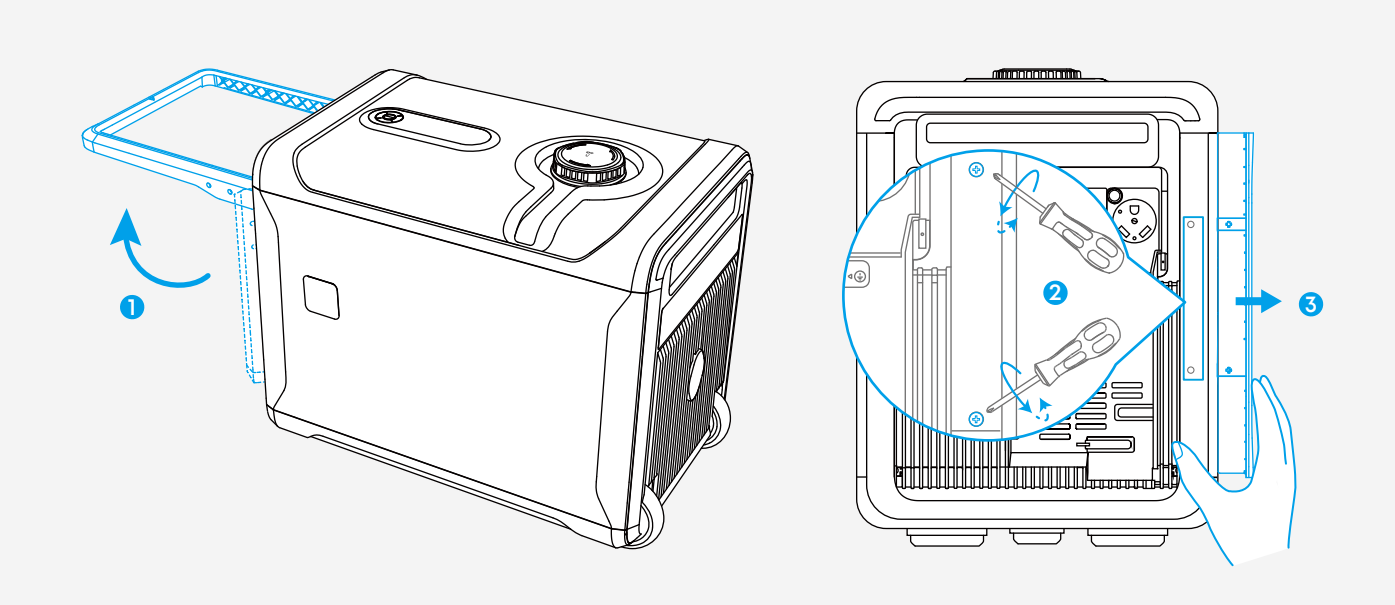

## 4.3 Connect Starter Battery

Open the protective covers and attach the battery connectors firmly.

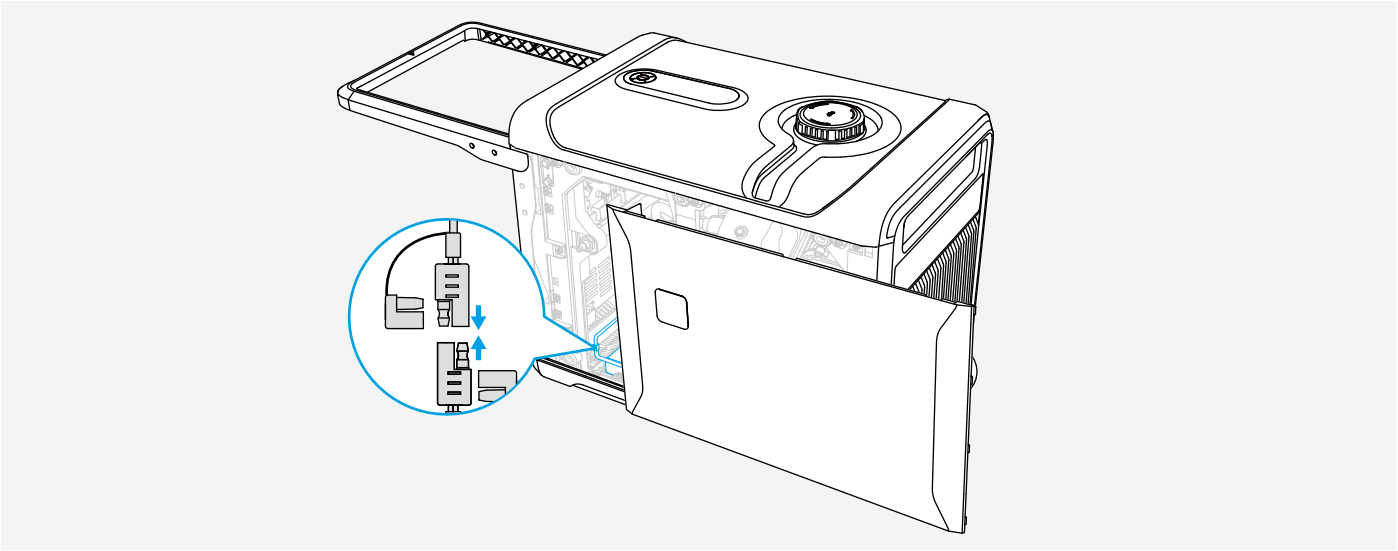

## 4.4 Add Engine Oil

Engine oil lubricates, cools, cleans, and protects engine components to ensure normal operation.

**Engine oil capacity:** 650 ml (22 oz)

**Recommended engine oil:**

| Ambient Temperature | Type | Grade |
|---|---|---|
| 5 to 120 °F (-15 to 49 °C) | 10W-30 | API SJ or higher |
| -20 to 60 °F (-29 to 16 °C) | 5W-30 | API SJ or higher |
| 66.6 to 120 °F (19 to 49 °C) | 10W-40 | API SJ or higher |
| -20 to 120 °F (-29 to 49 °C) | 5W-30 Full Synthetic | API SJ or higher |

1. Remove the dipstick and wipe it clean.
2. Add engine oil through the funnel.
3. Check the oil level by inserting the dipstick into the oil filler.
   · If the level is low, add oil gradually.
   · If the level is high, drain excess oil. See the section “Replace the Engine Oil”.
4. Reinstall the dipstick securely.

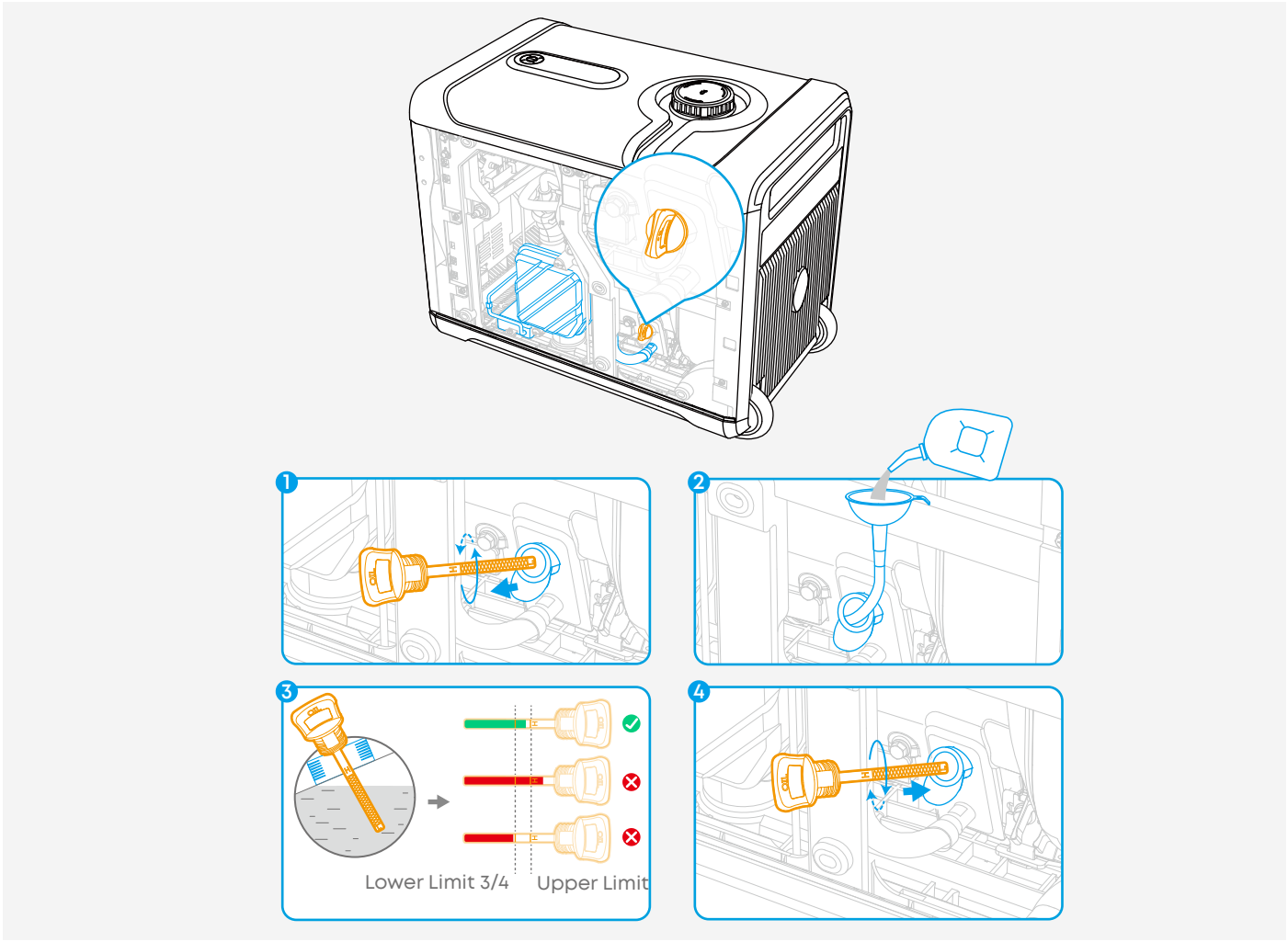


## 4.5 Install Maintenance Cover

1. Lift the handle.
2. Align the right edge of the cover with the smart generator frame.
3. Push the cover inward until it fits into place.
4. Tighten the screws to secure the cover.

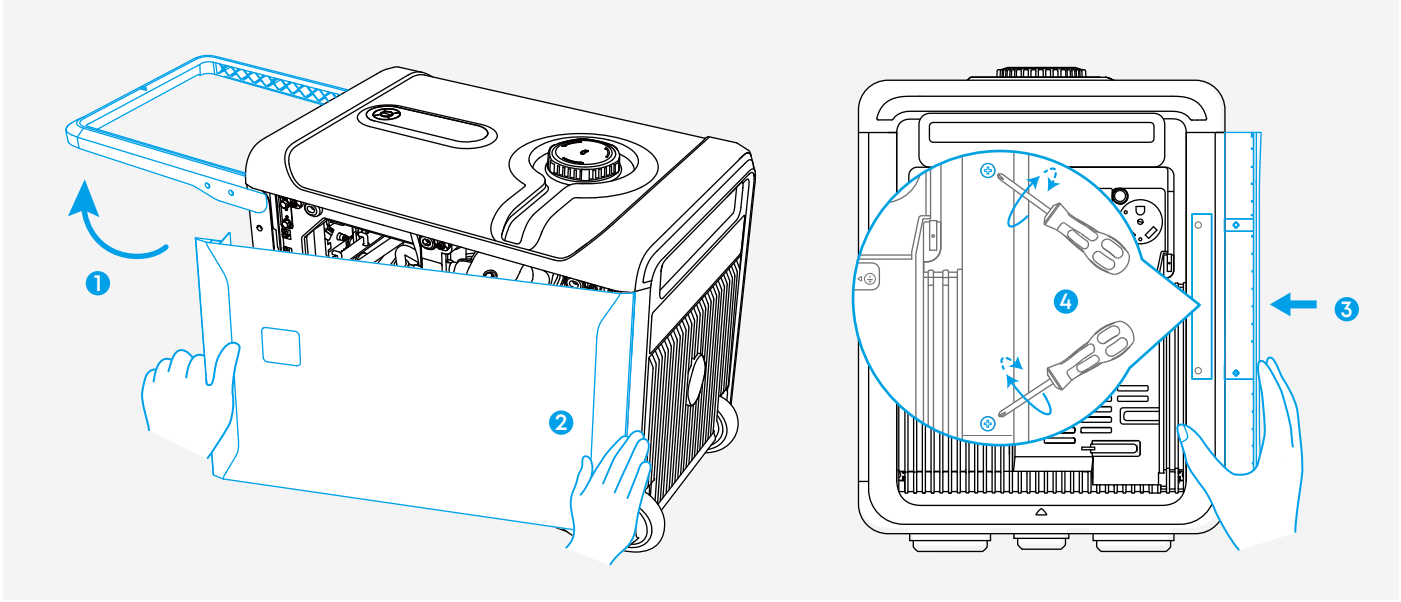

# 5. Add Fuel

⚠ · Read all instructions in the section “12. Safety Information”.
· Make sure the smart generator is turned off before adding fuel.
· Do not smoke when adding fuel.

## 5.1 Use Gasoline

⚠ · Use unleaded fuel only. Leaded fuel may severely damage internal generator parts.
· Do not overfill the fuel tank. Fuel may expand and spill out when the tank warms up.
· Clean spilled fuel with a clean and soft cloth to avoid damaging the rubber shell.

· Fuel tank capacity: 10L / 2.64 gal
· Fuel type: Unleaded gasoline with an ethanol content of up to 10%

### Add Gasoline

1. Remove the fuel cap on top of the smart generator.
2. Fill the tank with unleaded gasoline up to the red ring, which marks the maximum fuel level.
3. Close the fuel cap tightly.

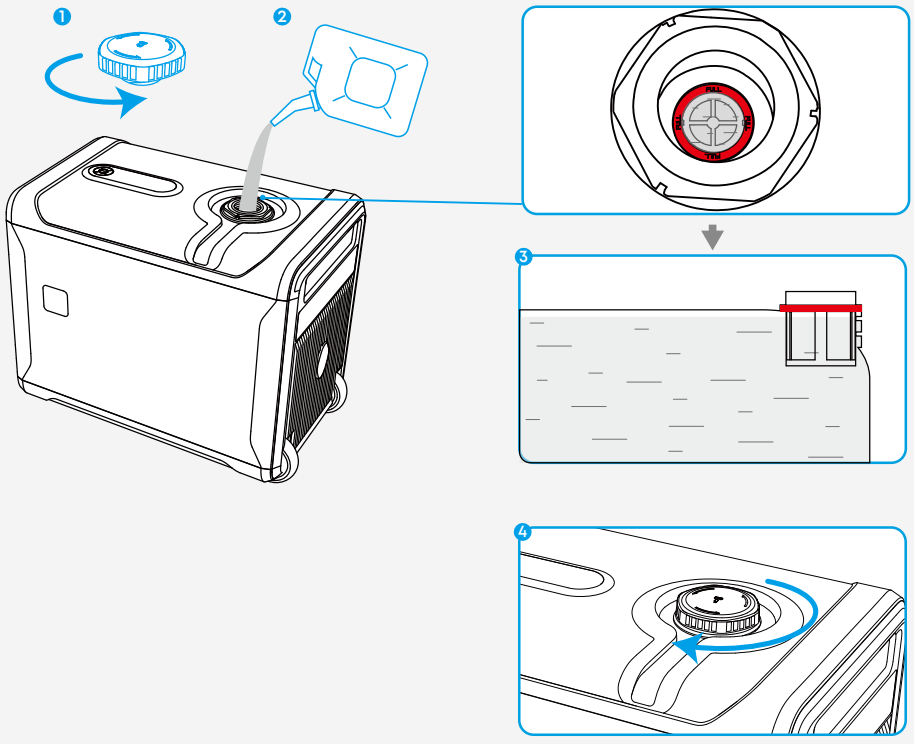

## 5.2 Use LPG / Propane

⚠ · Use an approved LPG cylinder equipped with an overfill prevention device.
· Check that the cylinder's inspection date is valid.
· Secure the cylinder upright to prevent bending or twisting of the hose.
· Close the cylinder valve immediately after the engine shuts down.
· Never place the cylinder or hose near the smart generator exhaust path or any heat source during operation.

· Compatible cylinder size: 20 / 30 / 40 / 100 lb (9 / 13.6 / 18 / 45.4 kg)
· It is recommended to use a larger cylinder in winter. The recommended size is 40 lb.

### Connect the LPG Cylinder

1. Ensure that the cylinder valve is fully closed.
2. Attach the hose to the valve and tighten by hand.
3. Insert the hose connector into the smart generator inlet by pulling the outer collar.
4. Release the outer collar and pull gently on the hose to confirm a secure connection.

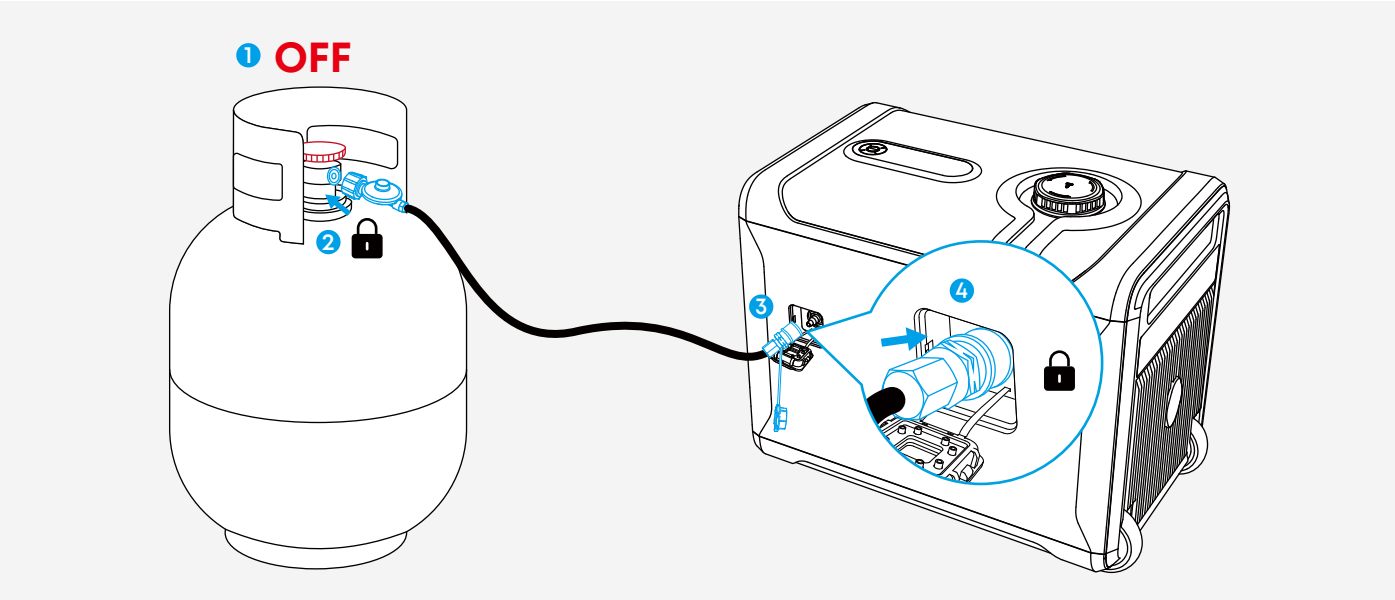

### Check for LPG Leaks

1. Ensure both ends of the hose are securely connected, then slowly open the cylinder valve.
2. Apply a soap-and-water solution to all connections. Take actions based on your observations.

| Observation | Action |
|---|---|
| No bubbles | No leak is present; close the valve. |
| Bubbles near a fitting | 1. Close the valve.<br>2. Tighten the fitting.<br>3. Open the valve and recheck using soapy water. |
| Bubbles remain or appear elsewhere | Close the valve and contact customer support. |

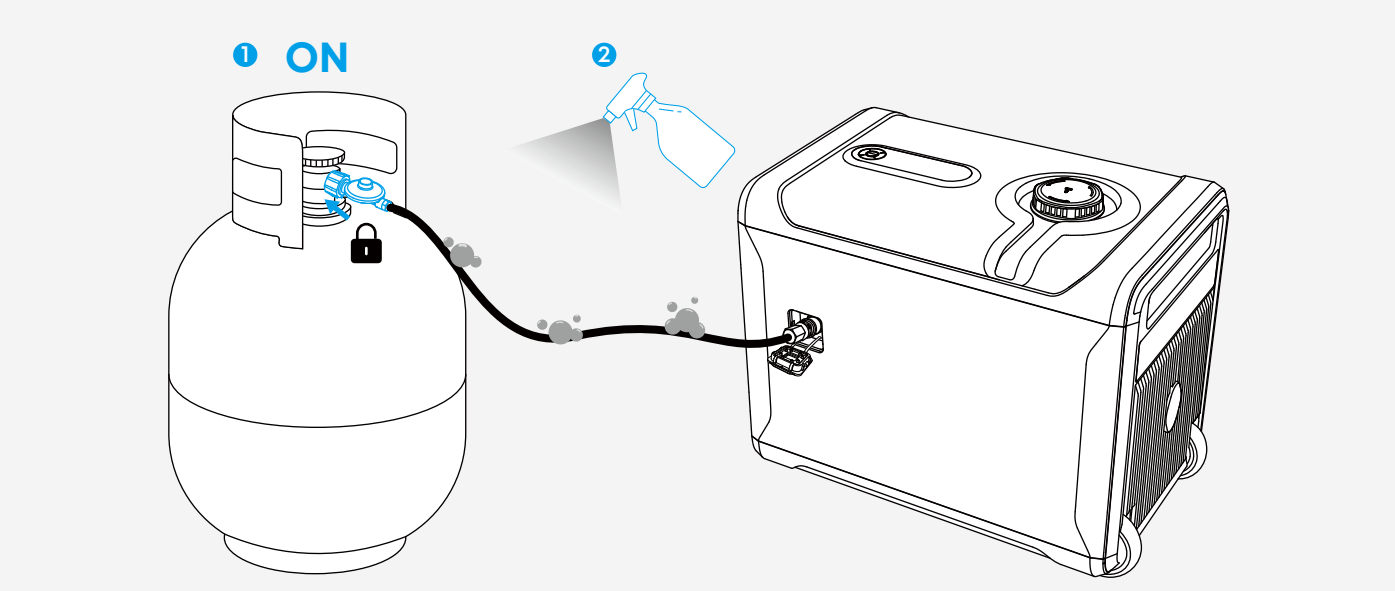


## 5.3 Use Natural Gas

⚠
- Never place the natural gas hose near the smart generator exhaust path or any heat source during operation.
- Use a dedicated natural gas supply line with a shut-off valve for proper operation.
- Consult your local gas supplier or municipality for installation requirements and local codes.
- All piping and connections must comply with local codes. Installations should be performed by certified personnel familiar with local regulations.
- Prevent dust or foreign particles from entering the natural gas adapter. Contamination may cause leakage.
- For long-term use, position the smart generator to a concrete pad or anti-slip mat.

Prepare a natural gas hose that meets the specifications below.

| | |
|---|---|
| **Inner Diameter** | 3/4" |
| **Material** | Short-term use: Rubber hose<br>Long-term use: Stainless-steel hose |
| **Connector** | Valve side: Matches the residential gas line fitting<br>Adapter side: 3/4" male thread |

### Connect the Natural Gas Hose

1. Ensure that the gas valve is fully closed.
2. Attach the male thread end of the hose to the adapter.
3. Insert the adapter into the smart generator inlet by pulling the outer collar.
4. Release the outer collar and pull gently on the hose to confirm a secure connection.

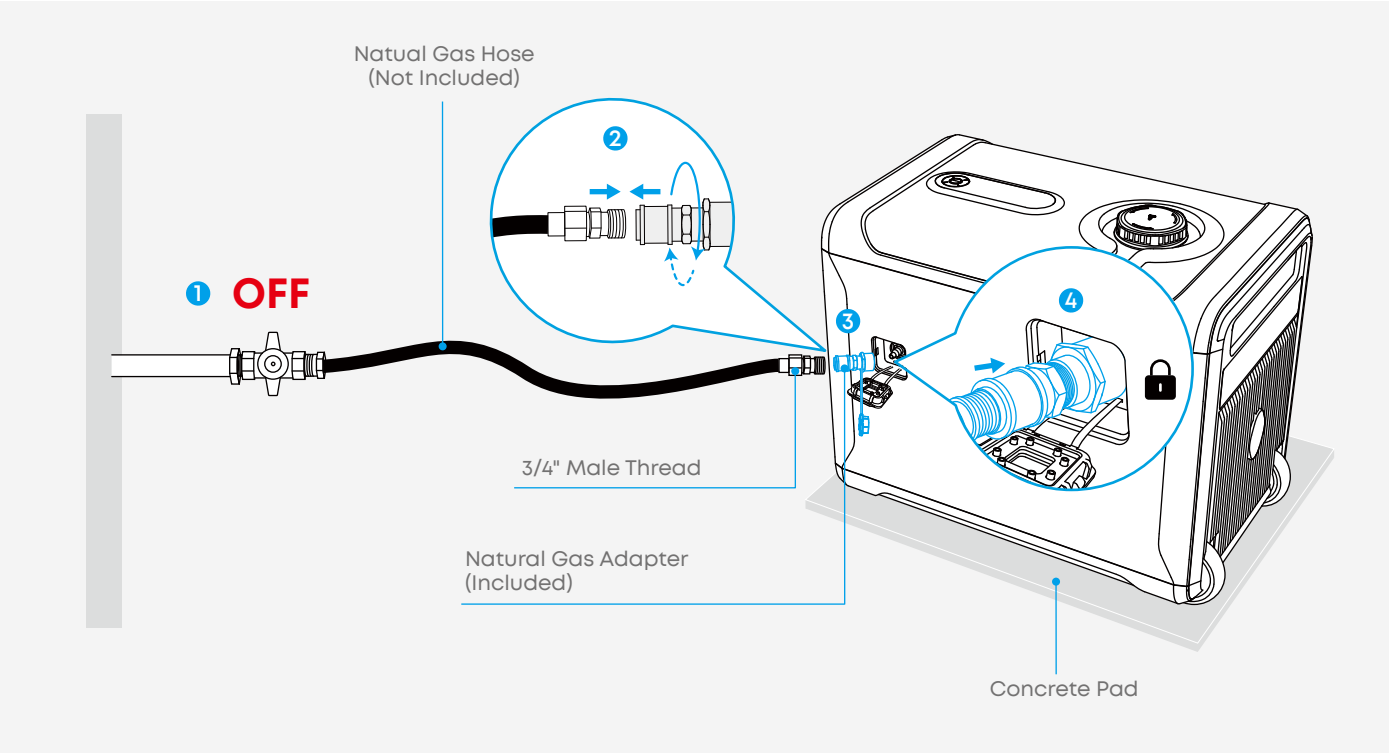


### Check for Natural Gas Leaks

1. Ensure both ends of the hose are securely connected, then slowly open the gas valve.
2. Apply a soap-and-water solution to all connections. Take actions based on your observations.

| Observation | Action |
| --- | --- |
| No bubbles | No leak is present; close the valve. |
| Bubbles near the valve | 1. Close the valve.<br>2. Tighten the valve-side connector.<br>3. Open the valve and recheck using soapy water. |
| Bubbles near the adapter | 1. Close the valve.<br>2. Tighten the adapter (using Teflon tape if needed).<br>3. Open the valve and recheck using soapy water. |
| Bubbles remain or appear elsewhere | Close the valve and contact customer support. |

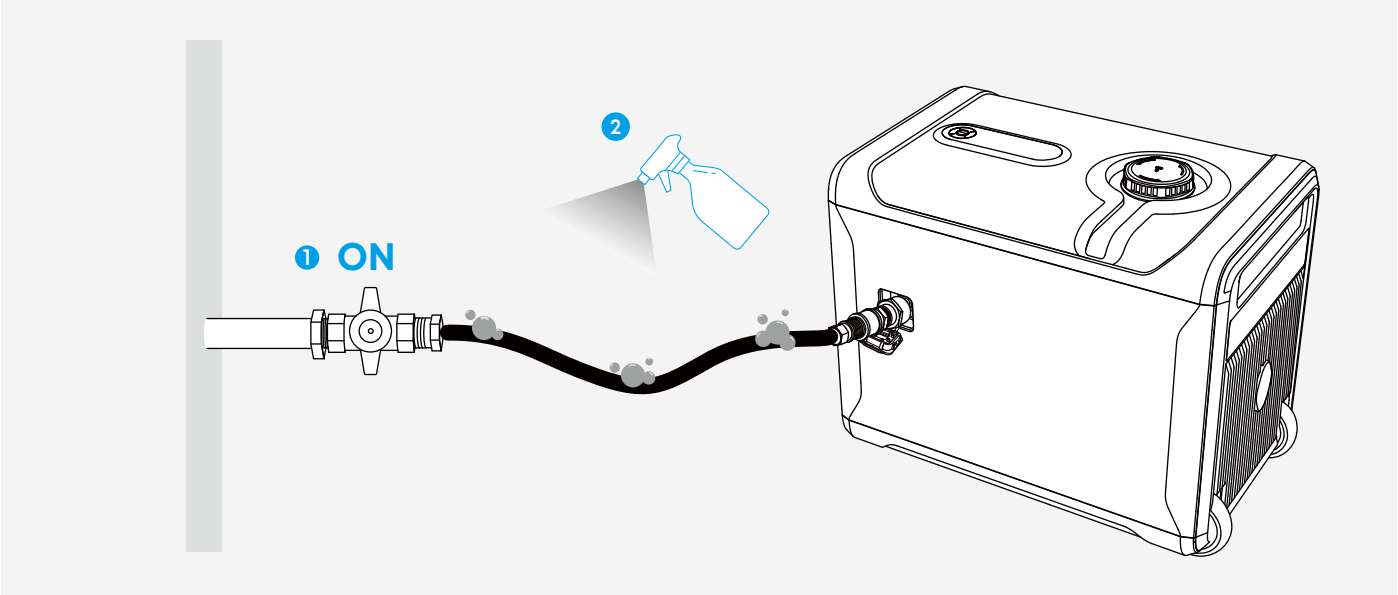


## 5.4 Check before Each Use

Carefully check the following items each time before starting the engine.

| Item | Inspection |
| --- | --- |
| **Engine Oil** | ☐ Proper level<br>☐ No leaks |
| **Gasoline** | ☐ Proper level<br>☐ No spills |
| **LPG** | ☐ Cylinder positioned safely away from generator exhaust path and other heat sources<br>☐ Valid cylinder inspection date<br>☐ Hose not bent or twisted<br>☐ No leaks |

| | |
|---|---|
| **Natural Gas** | ☐ Hose positioned safely away from generator exhaust path and other heat sources<br>☐ Hose not bent or twisted<br>☐ No leaks |
| **Starter Battery** | ☐ Properly connected |
| **Grounding** | ☐ Proper grounding |
| **Air Inlet and Muffler** | ☐ No foreign objects or blockage |

# 6. Device Setup

## 6.1 Power On and Select Fuel Type

⚠ · When using LPG or NG, open the cylinder or gas valve.

· Always set the engine switch to a valid position: 0° (OFF), 90° (LPG), 180° (GAS), or 270° (NG).

· Do not set the switch between positions. An invalid alignment may block fuel or gas flow and cause the smart generator to malfunction.

Turn the engine switch to your desired fuel type. This will automatically power on the smart generator.

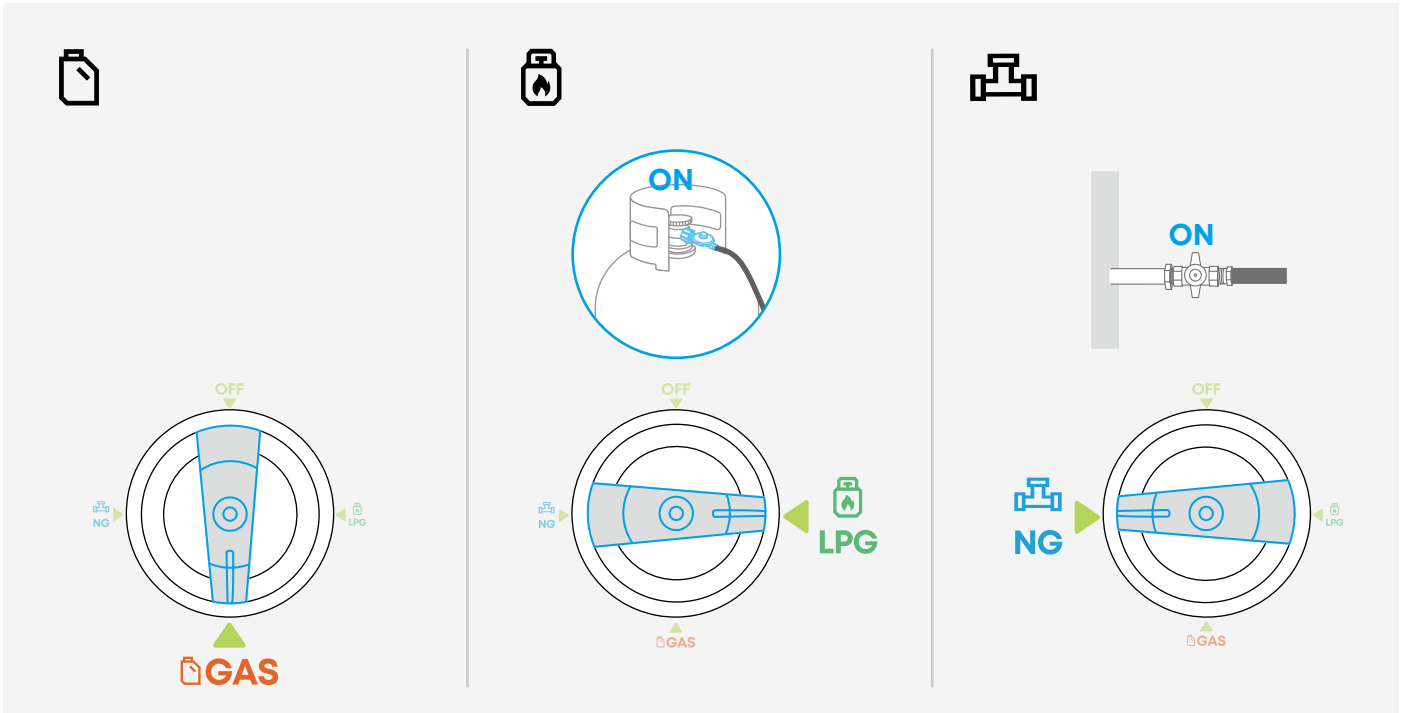

## 6.2 Enable Networking Mode

· Make sure the smart generator is on.

· Press the IoT button to enable networking mode.

· When networking mode is enabled, the light bar flashes blue and the Bluetooth icon flashes white on the display.

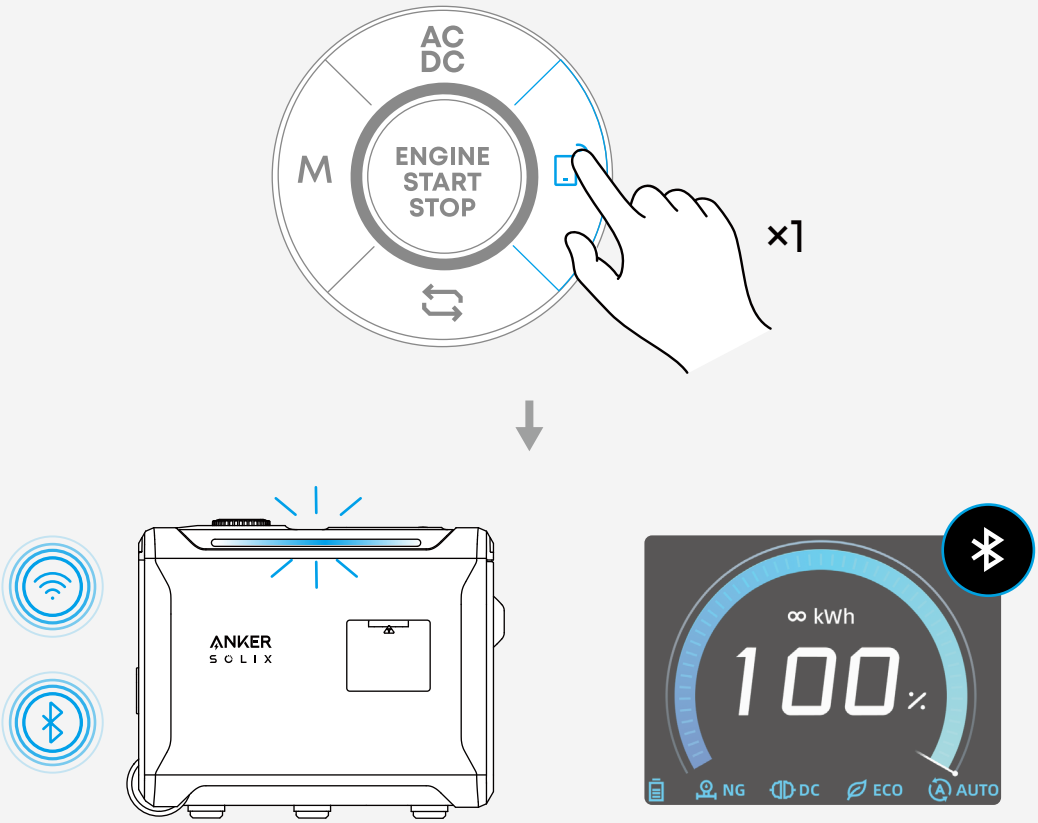


## 6.3 Use the Anker App

Ensure the smart generator is in networking mode.

1. Download the Anker app from the App Store (iOS devices), from Google Play (Android devices), or by scanning the QR code.

Anker

GET IT ON Google Play

Google Play and the Google Play logo are trademarks of Google Inc.

Download on the App Store

Apple and the Apple logo are trademarks of Apple Inc.

2. Add your generator to the app and follow the in-app instructions to complete setup.

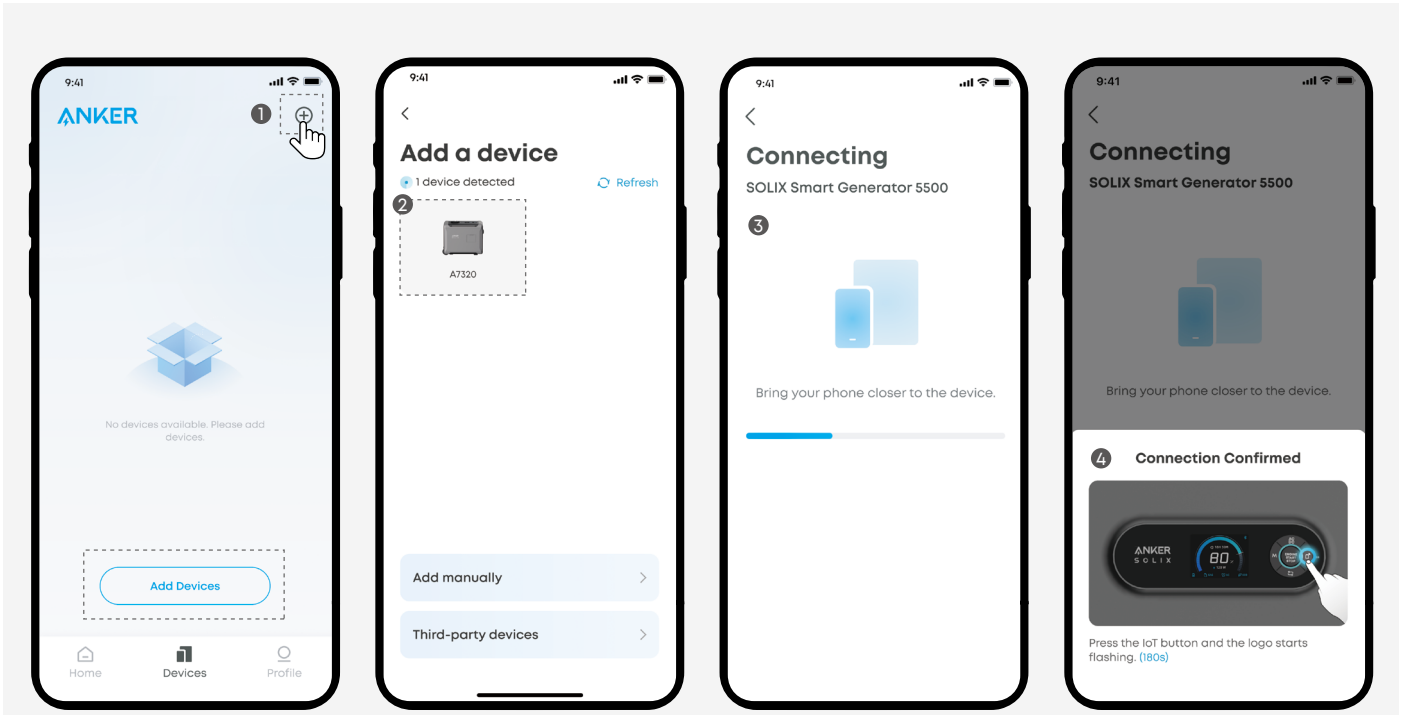


# 7. Engine Operation

Start or stop the smart generator using one of the methods below.

## 7.1 Electric Start-Stop

Press the engine start / stop button for 2 seconds to start or stop the engine.

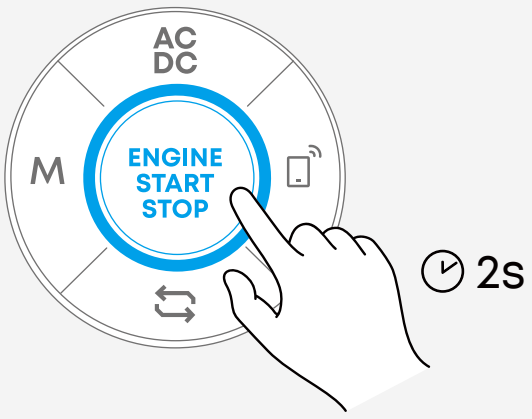

## 7.2 App Start-Stop

Open the Anker app and slide to start the engine. Slide again to stop the engine.

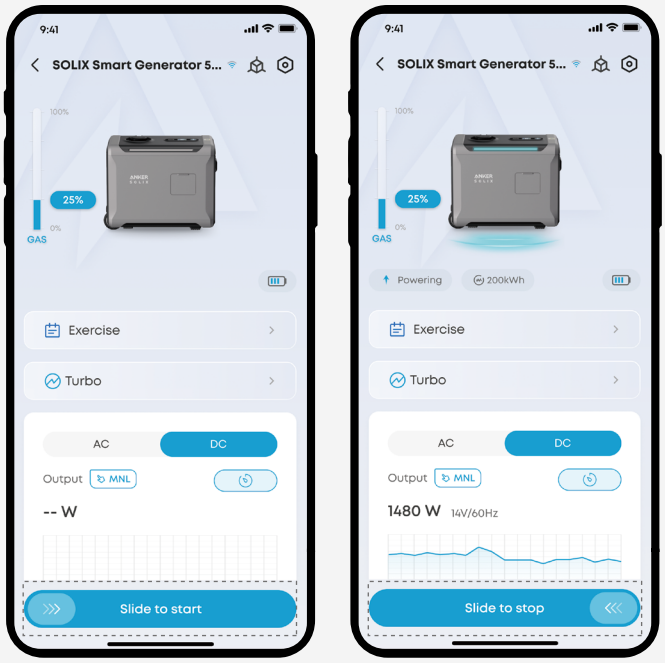


## 7.3 Manual Start

· If the starter battery level is low, it is recommended to recharge the battery and start the generator using electric start.

· Use manual start only when the starter battery cannot be charged and gasoline is used as the fuel source.

1. Turn the engine switch to GAS.
2. Hold the smart generator firmly to prevent vibration or movement during starting.
3. Pull the recoil starter grip until you feel resistance, and then force it in. Repeat every 2 to 3 seconds until the engine starts.
4. Return the grip slowly to its original position to avoid damage. Do not let the grip snap back.

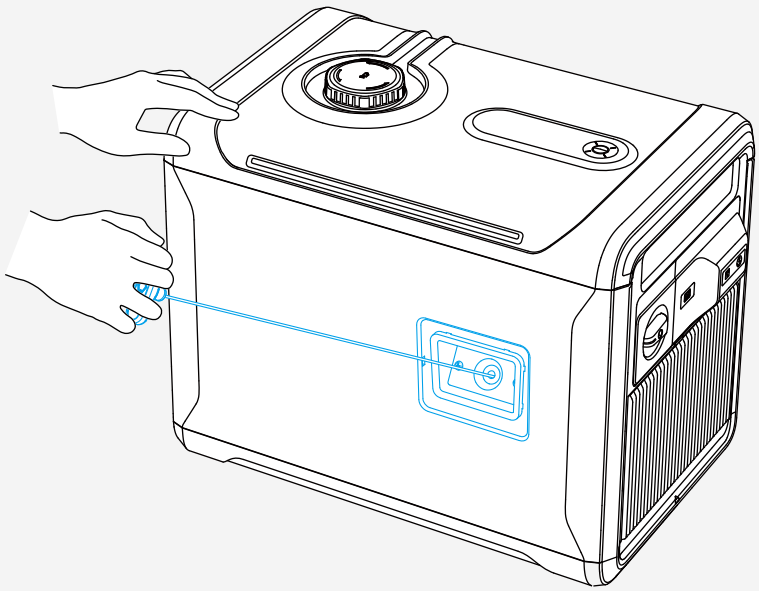

## 7.4 Auto Start-Stop

Auto start-stop enables the smart generator to start and stop automatically based on preset conditions. This feature is currently supported when the smart generator connects with Anker SOLIX devices.

### Use with Anker SOLIX E10

For detailed instructions, see the section Smart Generator in the E10 System and App Guide.

### Use with Anker SOLIX Portable Power Station

For detailed instructions, see “Appendix 6. Use with Anker SOLIX Portable Power Station”.

# 8. Power Your Devices

The smart generator operates in either AC or DC mode. Only one output mode can be active at a time. Select the appropriate mode based on the connected devices.

## 8.1 AC Powering

- In this scenario, always start and stop the engine with no loads connected.
- The total connected loads must not exceed the smart generator's rated capacity.
- When the smart generator will not be used for an extended period, turn the engine switch to OFF. This prevents power loss from the starter battery.

### To Start Power Supply

1. Turn the engine switch to the desired fuel type.
2. Start the engine.
3. Connect the devices to the smart generator through the AC output ports.

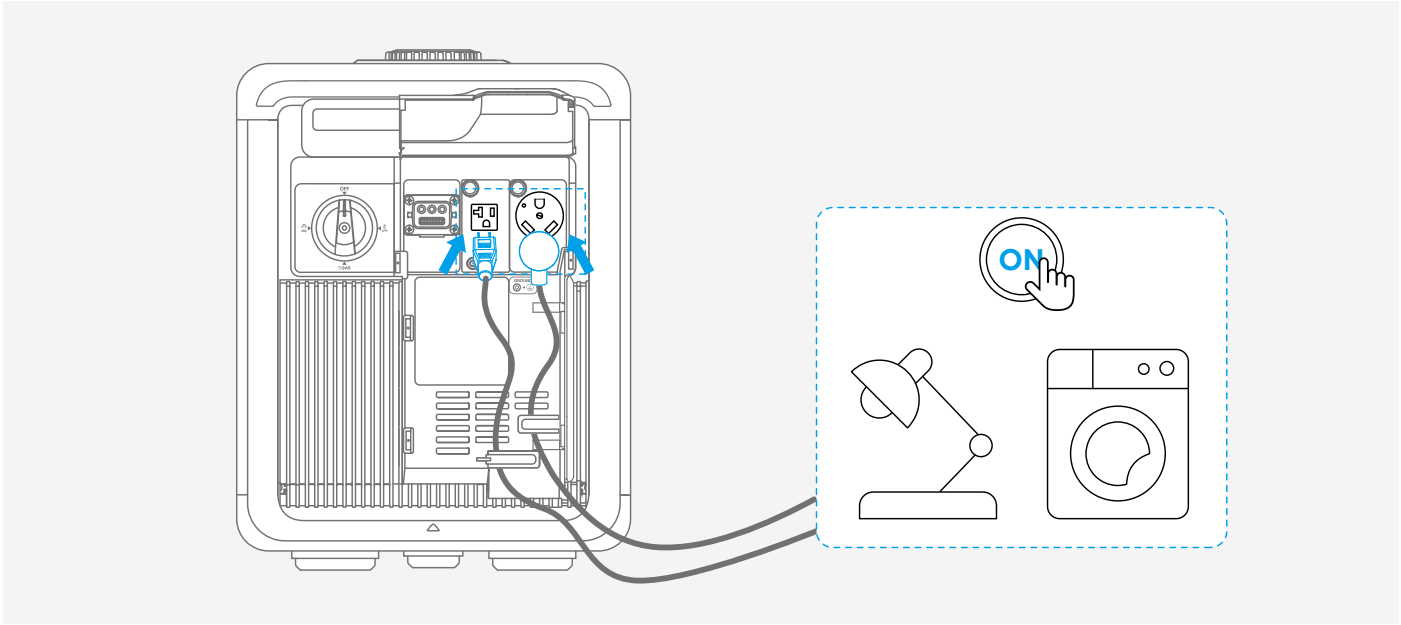


4. Set the smart generator to AC mode.

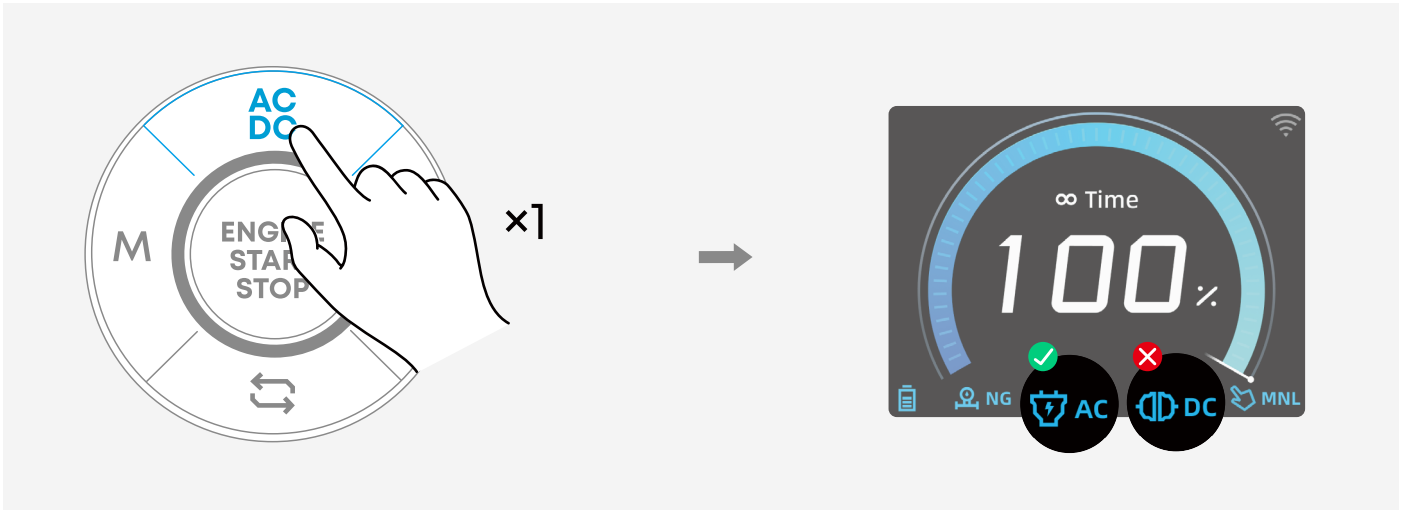


5. Turn on the devices.

### To Stop Power Supply

1. Turn off the devices.
2. Disconnect the devices from the smart generator.
3. Stop the engine.
4. Turn the engine switch to OFF.

## 8.2 DC Powering

For detailed instructions, see the section Range-Extended Backup System (A17E1, A7320) in the E10 System and App Guide.

# 9. Power Off

### Auto Power-Off

When the smart generator remains inactive for 24 hours, it will turn off automatically.

### Emergency Power-Off

To power off the smart generator while the engine is running, turn the engine switch to OFF directly in an emergency.

### Regular Power-Off

After the engine stops running, turn the engine switch to OFF.




# 10. Maintenance

Perform routine maintenance to keep the smart generator in safe and reliable operating condition.

## 10.1 Precautions

Follow these precautions before performing any maintenance.

| Goal | Action |
| --- | --- |
| **Power Off** | Always turn the engine switch to OFF and disconnect the smart generator from connected devices. |
| **Avoid Burns** | Allow the smart generator to cool down completely before touching any part. The engine and its exhaust system can remain extremely hot for a long time after shutdown. |

| | |
|---|---|
| **Prevent Accidental Start-Ups** | Remove the spark plug cap from the spark plug to prevent unexpected starting. |
| **Ensure Ventilation** | Perform maintenance in a well-ventilated area. |
| **Handle Fuel with Care** | Fuel is highly flammable. Keep it away from heat and ignition sources. |
| **Place on a Flat Surface** | Set the smart generator on a flat, stable surface. |

## 10.2 Maintenance Schedule

Follow the intervals below and complete each task promptly.

| |
|---|
| **Before Each Use** |
| · Check engine oil level and add oil if necessary.<br>· Check for any LPG or NG leaks. |
| **After the First 20 Hours of Operation** |
| · Replace engine oil. |
| **Every 50 Hours of Operation or Annually** |
| · Replace engine oil if the smart generator operates under high temperatures or heavy loads.<br>· Clean the air filter.<br>· Replace the air filter if the smart generator operates in dusty or harsh environment. |
| **Every 100 Hours of Operation or Annually** |
| · Replace engine oil.<br>· Replace the air filter.<br>· Clean and adjust the spark plug.<br>· Clean the spark arrestor.<br>· Clean the fuel filter. |
| **Every 250 Hours of Operation** |
| · Clean the combustion chamber*****.<br>· Adjust valve clearance*****. |
| **Every 3 Years** |
| · Replace the smart generator fuel pipe*****.<br>· Replace the LPG hose and the smart generator LPG pipe*****. |
| ***Warning**: These tasks require professional servicing. Unauthorized operations may cause engine damage and safety hazards. |

# 10.3 App Reminders

The Anker app can send reminders when maintenance is due. To receive notifications, ensure the smart generator is connected to Wi-Fi.

## Enable Reminders

Go to **Settings** > **Maintenance** and enable **Allow Notification**.

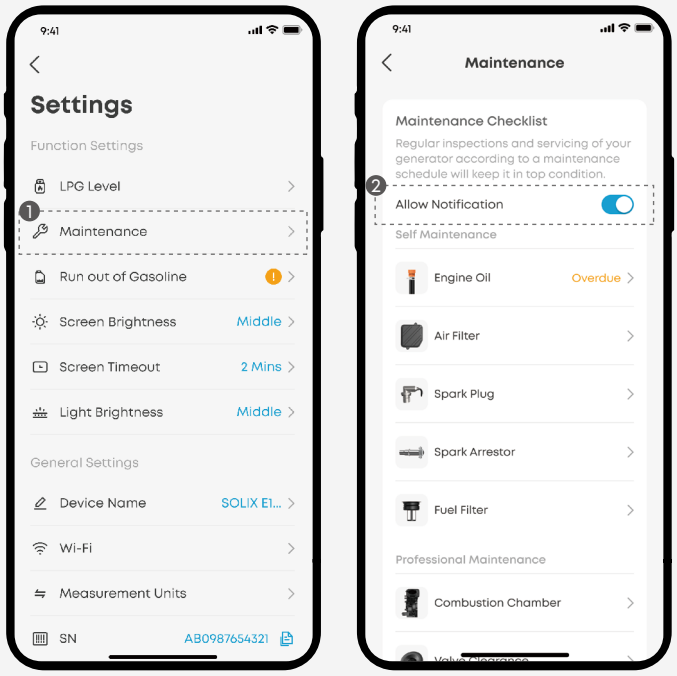


## Reset Reminders

1. Open the maintenance prompt on the device home page.
2. Select the overdue task to view details.
3. After completing the task, tap **Reset** to restart the timer.

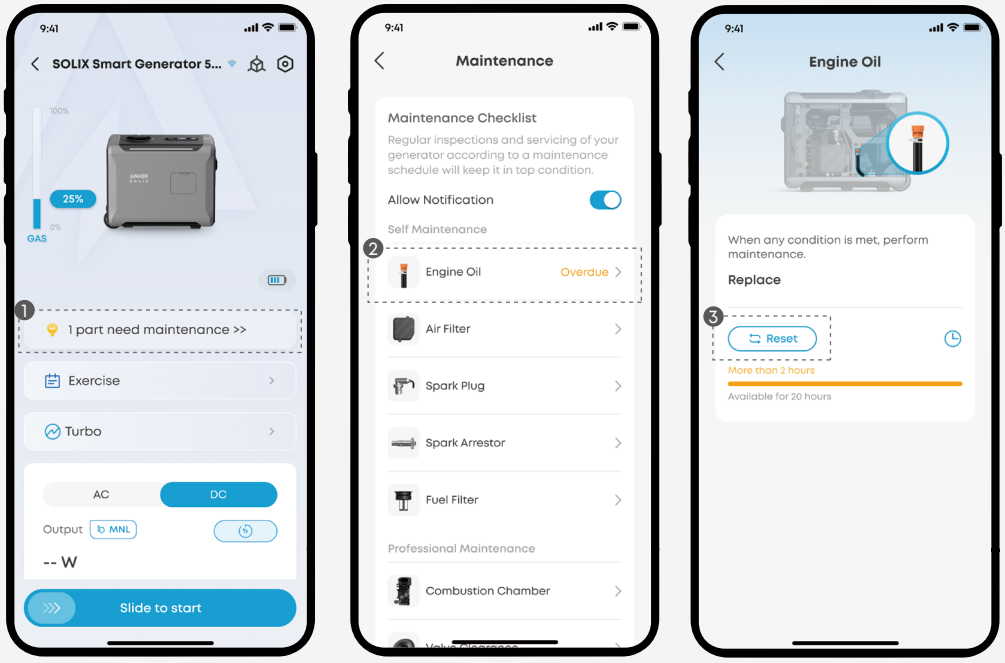

## 10.4 User Maintenance Tasks

The following maintenance tasks can be performed by users. Tasks requiring professional servicing, such as combustion chamber cleaning, must be carried out by qualified technicians.

### Check Generator Position

The smart generator may shift over time on uneven, soft, or slippery ground. The movement can pull connected hoses and cables, causing stress on connections or unexpected disconnection.

To keep connections safe and stable, check the smart generator position regularly.

1. Inspect the generator position periodically. If movement is found, reposition the smart generator. It is recommended to place anti-slip pads under the smart generator or use sandbags to prevent movement.
2. Verify that all hoses and cables are secure and not strained.

### Replace the Engine Oil

1. Place the smart generator on level ground. Start it for a few minutes, then turn the engine switch to OFF.

   Hot oil may cause burns. Do not drain oil immediately after shutdown.
2. Remove the maintenance cover.
3. Raise the smart generator on a stable platform.
4. Extend the drain hose from the bottom into a drain pan.

   Keep the hose end below the engine base for complete draining.

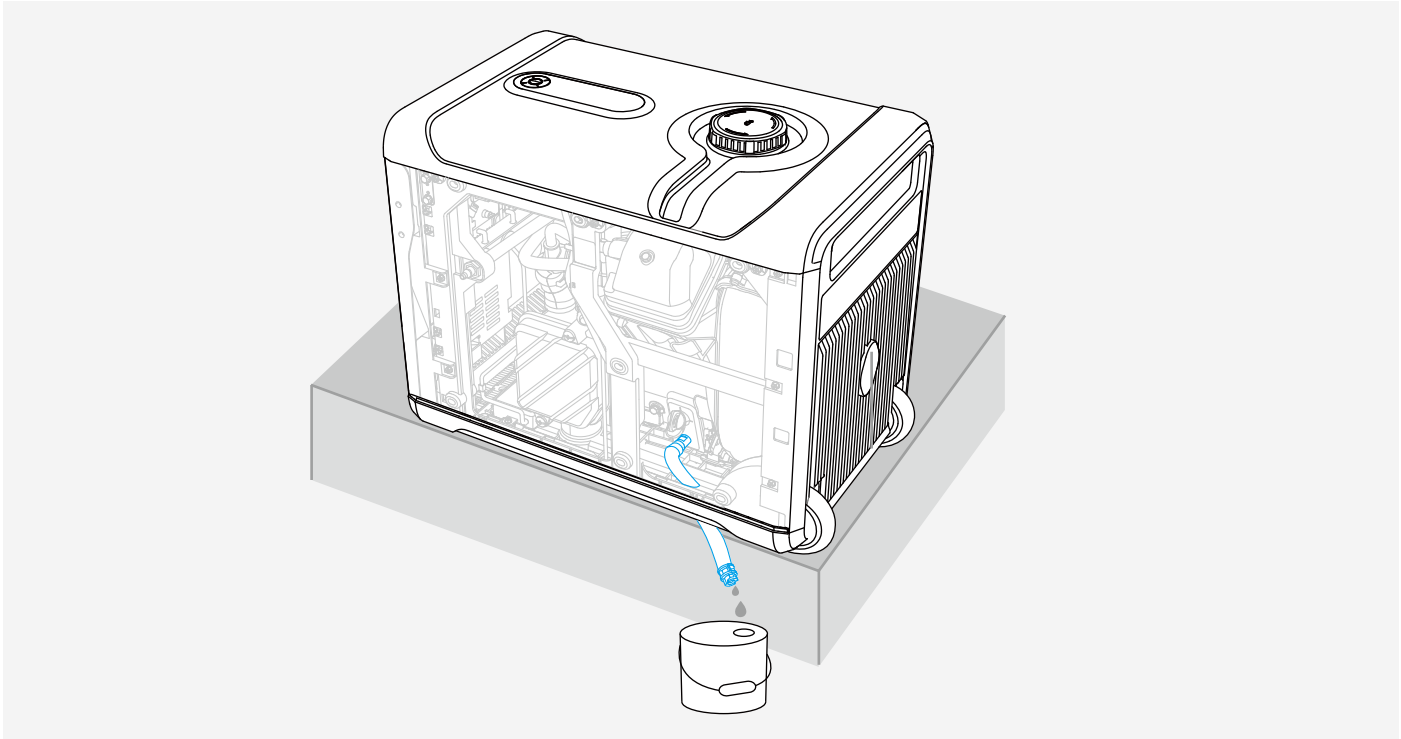

5. Reattach the drain hose to the bracket.
6. Lower the smart generator back to level ground.

7. Fill engine oil to the proper level.

   See the section “4.4 Add Engine Oil” for details.

8. Install the maintenance cover.
9. Dispose of used oil properly.

   Do not pour the oil into trash, on the ground, or down the drains. Store the oil in a sealed container and take it to an approved recycling center.

## Clean the Air Filter

1. Remove the maintenance cover.
2. Unscrew the air filter cover and take off the foam element

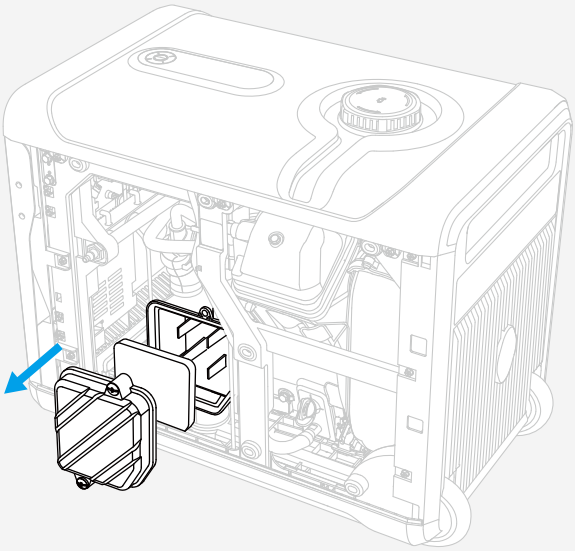

3. Wash the foam element with soapy water or a nonflammable solvent. Squeeze out excess liquid and let the foam element dry completely.

   Do not twist the foam element to avoid damage.

4. Apply a small amount of engine oil to the foam element and squeeze out excess oil.

   Do not twist the foam element. The foam element should be moist but not dripping.

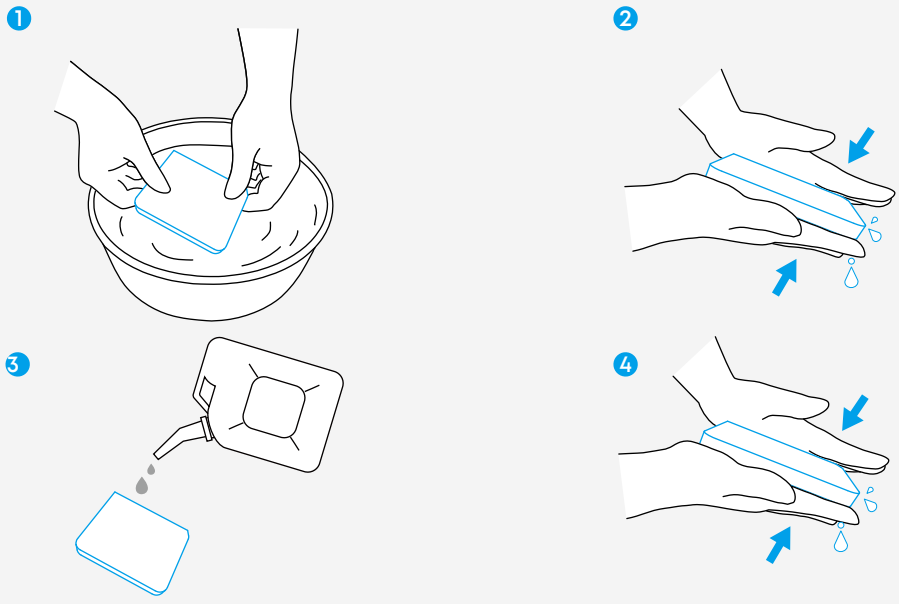

5. Place the foam element into the air filter housing.

   Do not run the smart generator without the foam element. This may release toxic gas and cause engine damage.

   Ensure that the foam surface fits tightly with no gaps.

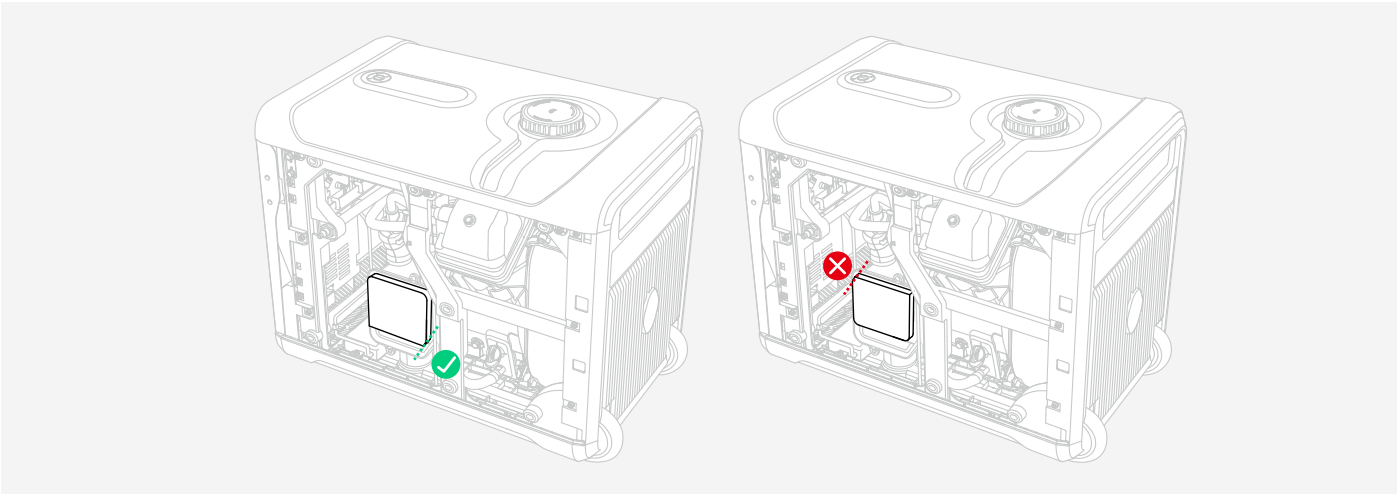

6. Tighten the air filter cover.
7. Install the maintenance cover.

## Clean and Adjust the Spark Plug

1. Remove the maintenance cover.
2. Take off the spark plug cap.
3. Remove the spark plug using the included socket and breaker bar.

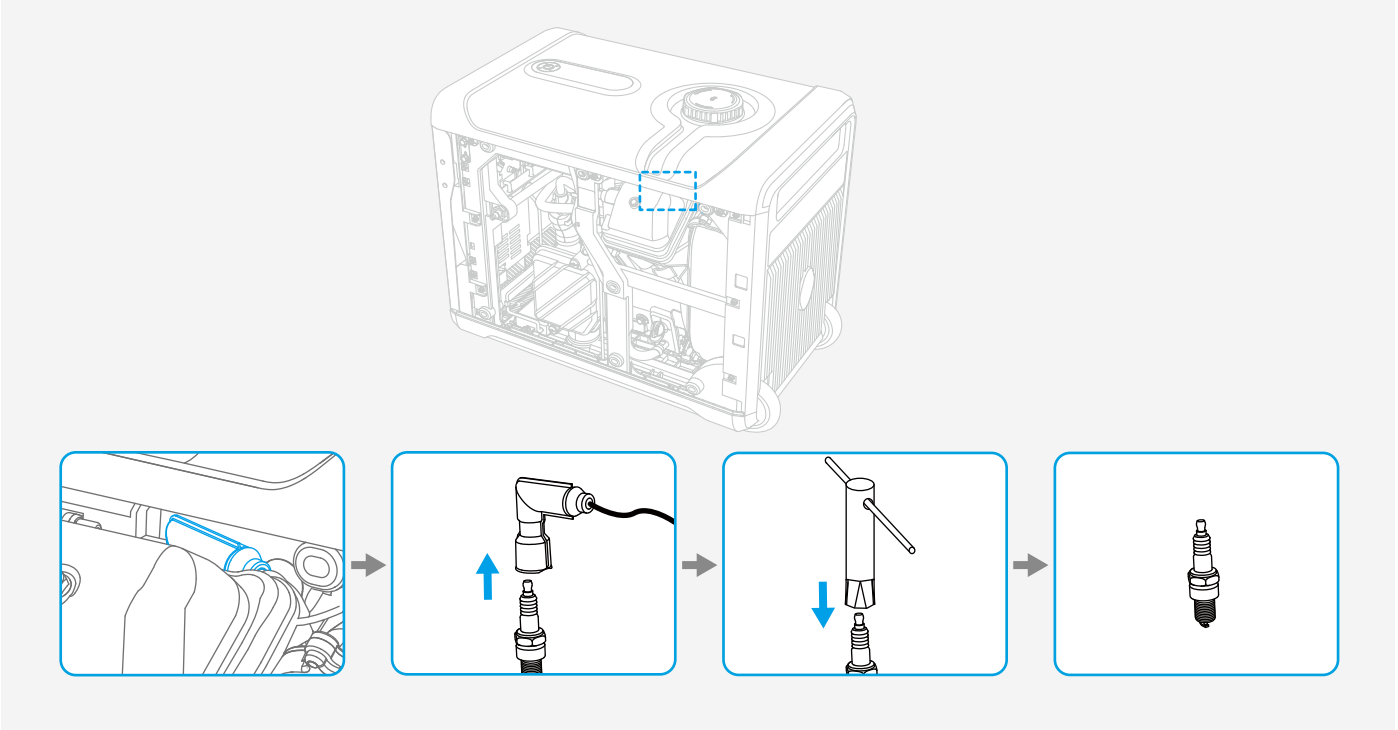

4. Inspect the following items and take corrective measures if necessary.

| Item | Normal Condition | If Abnormal |
|---|---|---|
| **Spark Plug** | No carbon deposits | Clean with a dry soft cloth. |
| **Insulator** | Light brown; no peeling, cracks, dirt | Replace with a new F6RTC spark plug. |
| **Center Electrode** | Clean and not worn | Replace with a new F6RTC spark plug. |
| **Electrode Gap** | 0.7 to 0.8 mm | Adjust the gap. Incorrect gap may cause misfire or engine damage. |

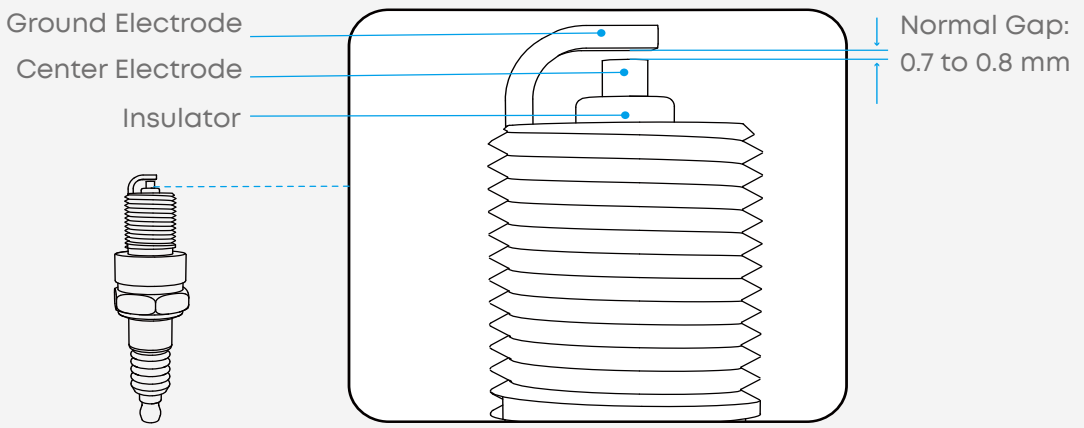


5. Install the spark plug.

   The tightening torque is 195 (±18) in-lb. If no torque wrench is available, tighten the plug until snug and turn an additional 1/4 to 1/2 rotation.

6. Install the spark plug cap.
7. Install the maintenance cover.

## Clean the Spark Arrestor

1. Make sure the smart generator is completely cooled down.
   Do not perform maintenance when the muffler is hot.
2. Remove the cover plate and the spark arrestor.

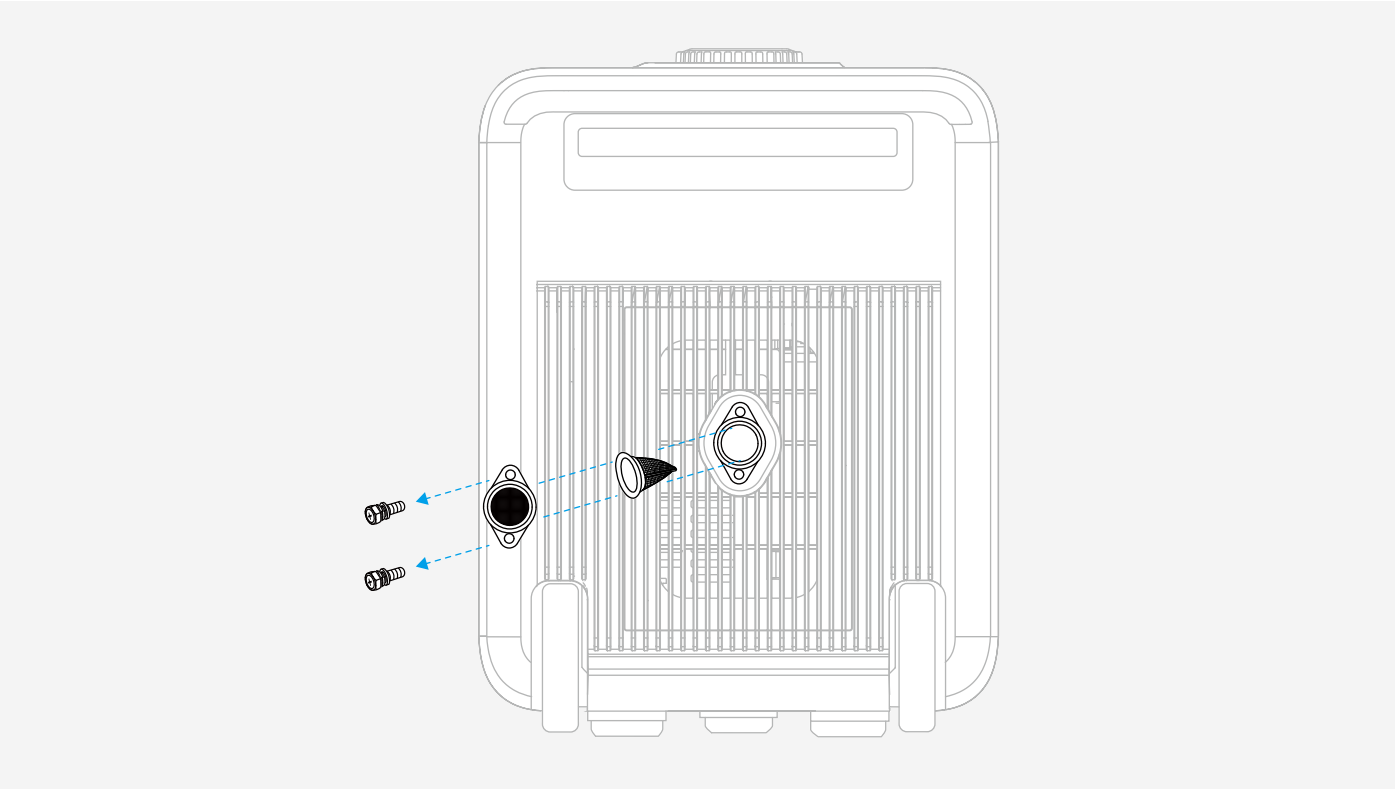

3. Clean carbon deposits from both parts using a wire brush.
   Clean gently to avoid scratching or damaging the metal surface.

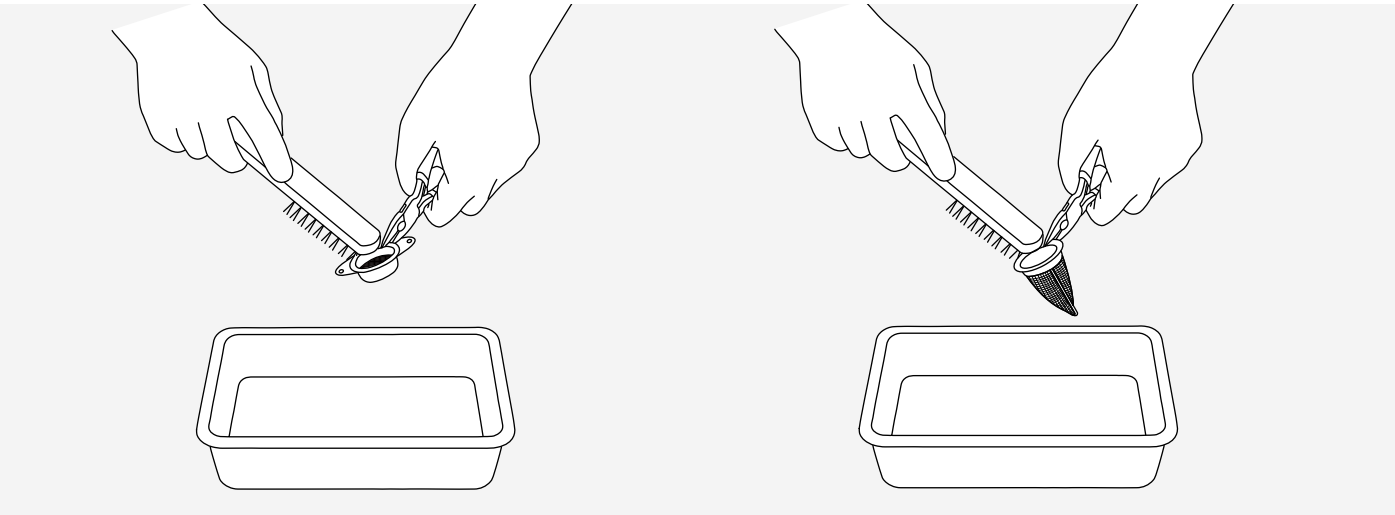

4. Inspect the cover plate and spark arrestor for damage. Replace them if necessary.
5. Assemble all the parts that were removed.

### Clean the Fuel Filter

1. Open the fuel tank cap and take out the fuel filter.
2. Clean the filter using a dedicated cleaning agent such as a carburetor cleaner.
3. Wipe the filter with a clean, dry cloth.
4. Place the filter back and tighten the fuel cap.

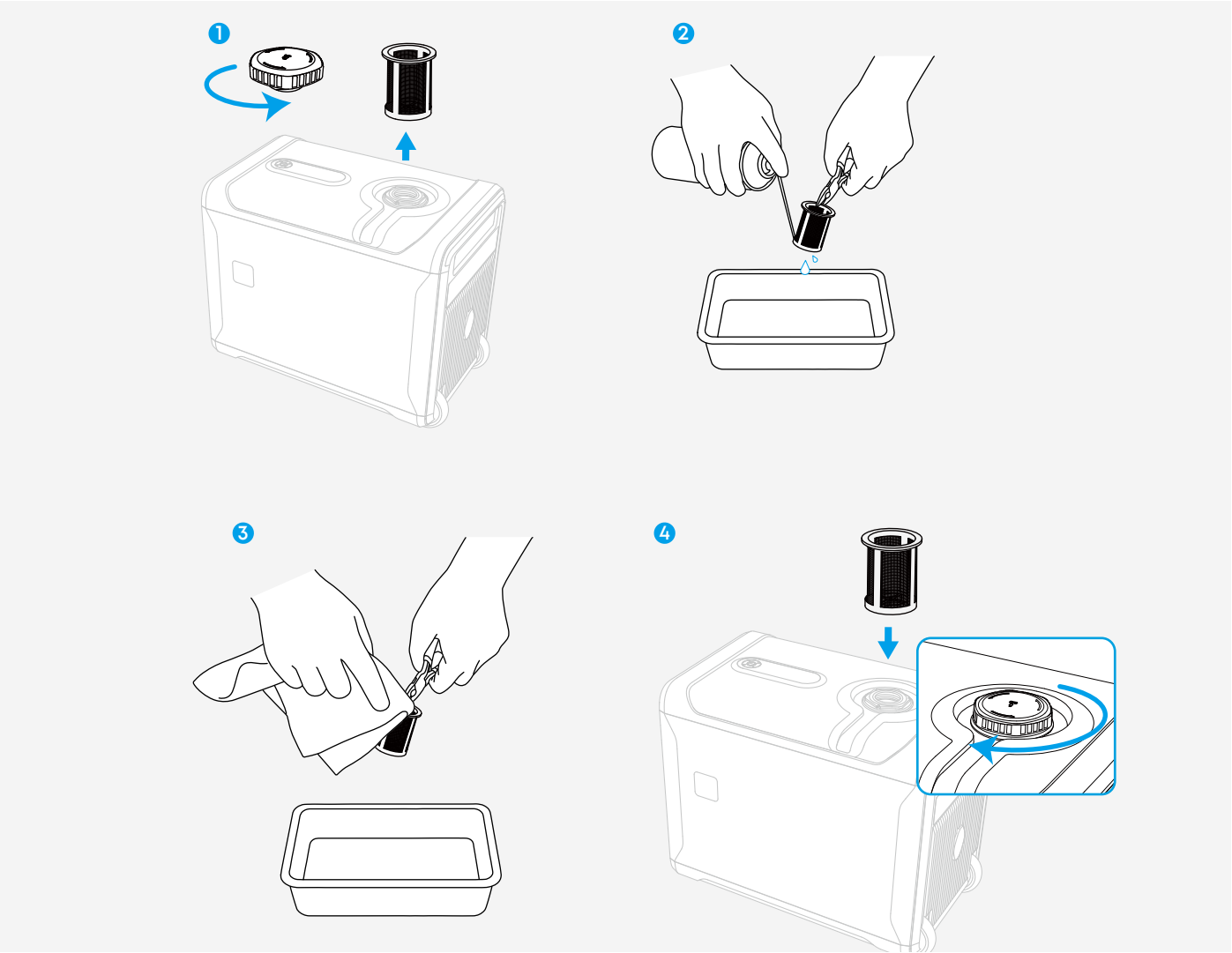


## 11. Specifications

Specifications are subject to change without notice.

| Model | A7320J40 |
|---|---|
| Product Name | Anker SOLIX Smart Generator 5500 (Tri-Fuel) |
| **Input and Output** | |
| Fuel Type | Gasoline (GAS), Propane (LPG), Natural Gas (NG) |
| Generator Type | Inverter Generator |
| Starting Power | 5.5 kW |
| DC Rated Power | 4.5 kW (GAS), 4.5 kW (LPG), 4 kW (NG) |

| | |
|---|---|
| DC Output Voltage | 400V |
| AC Rated Power | 3.6 kW (GAS, LPG, NG) |
| AC Output Voltage, Frequency | 120V, 60Hz |
| AC Output Inlet | NEMA 5-20R ×1, TT-30R ×1 |
| Enclosure Type | NEMA 3R |
| Starter Battery | 12.8V |
| Starter Battery Charging | 14.6V, 1A, Charger |
| Start Type | Recoil Start, Electric Button Start, App Start (Bluetooth / Wi-Fi), Remote Control by ESS, Scheduled Automatic Start |
| Running Mode | Turbo Mode, Eco Mode, Quiet Mode |
| **Engine** | |
| Engine Size | 224 cc |
| Engine Type | 4-Stroke |
| Engine Speed | Variable |
| Gasoline Capacity | 2.64 gal (10 L) |
| Gasoline Tank Material | Metal |
| Engine Oil Type | 10W-40<br>*Choose the appropriate engine oil type according to the conditions in your region. |
| Engine Oil Capacity | 22 oz (650 ml) |
| Noise (dB) | ECO Mode, 69dB (A) @ 7m |
| **Illumination** | |
| Status Indicator | Colored LED |
| **Screen** | |
| Type of Screen | TFT-LCD |
| **Safety and Compliance** | |
| Certifications Listing | EPA Conform |
| PGMA Compliant | G300-2023 |
| ETL Listing | cETL |
| EMC | FCC, CAN ICES (A) / NMB (A) |
| LVD | CSA C22.2 No. 100 |
| Certification | USDA, ANSI/PGMA G300-2023, FCC, PROP65, TSCA, ISTA, PFAS, UL 4200A, UN38.3 |
| CO Protection | CO Alarm |
| Flood Protection | 3 in (80 mm) |

| | |
|---|---|
| Operating Altitude | Up to 6,561 ft (2,000 m)<br>*Power correction is carried out according to SAE J1349 standard. |
| Operating Temperature | -4 to 131 °F (-20 to 55 °F )<br>*Power correction is carried out according to SAE J1349 standard. |
| **Others** | |
| Product Dimensions (W × H × D) | 27.9 × 22.2 × 16.5 in (709 × 565 × 420 mm) |
| Product Weight | 110.76 lbs (50.24 kg) |
| Warranty | 3 Years Limited |
| Wheels | Yes |

### Default Exposed Network Interfaces and Services

Bluetooth Low Energy (BLE) Status: When the equipment is not yet connected to a network, it will automatically enable BLE broadcasting and activate BLE services to provide Bluetooth network configuration capabilities.

Note: During the BLE configuration process, ensure your network environment is stable and follow the instructions to complete the setup.

| **Model** | **A7320J40-83** |
|---|---|
| Product Name | Anker SOLIX Smart Generator Starter Battery |
| Battery Type | Rechargeable Li-ion |
| Nominal Voltage | 12.8V |
| Rated Capacity / Energy | 2.5 Ah / 32 Wh |
| Maximum Charging Voltage | 14.6V |
| Product Dimensions | 6.18 × 3.03 × 1.26 in (157 × 77 × 32 mm) |
| Product Weight | 0.992 lbs (0.45 kg) |
| Operating Temperature | -4 to 131 ▯ (-20 to 55 ▯) |
| Warranty | 3 Years Limited |

# 12. Safety Information

## 12.1 Labels and Nameplate

The actual labels and nameplate may vary from the illustrations shown. Refer to the labels and nameplate on the smart generator for final information.

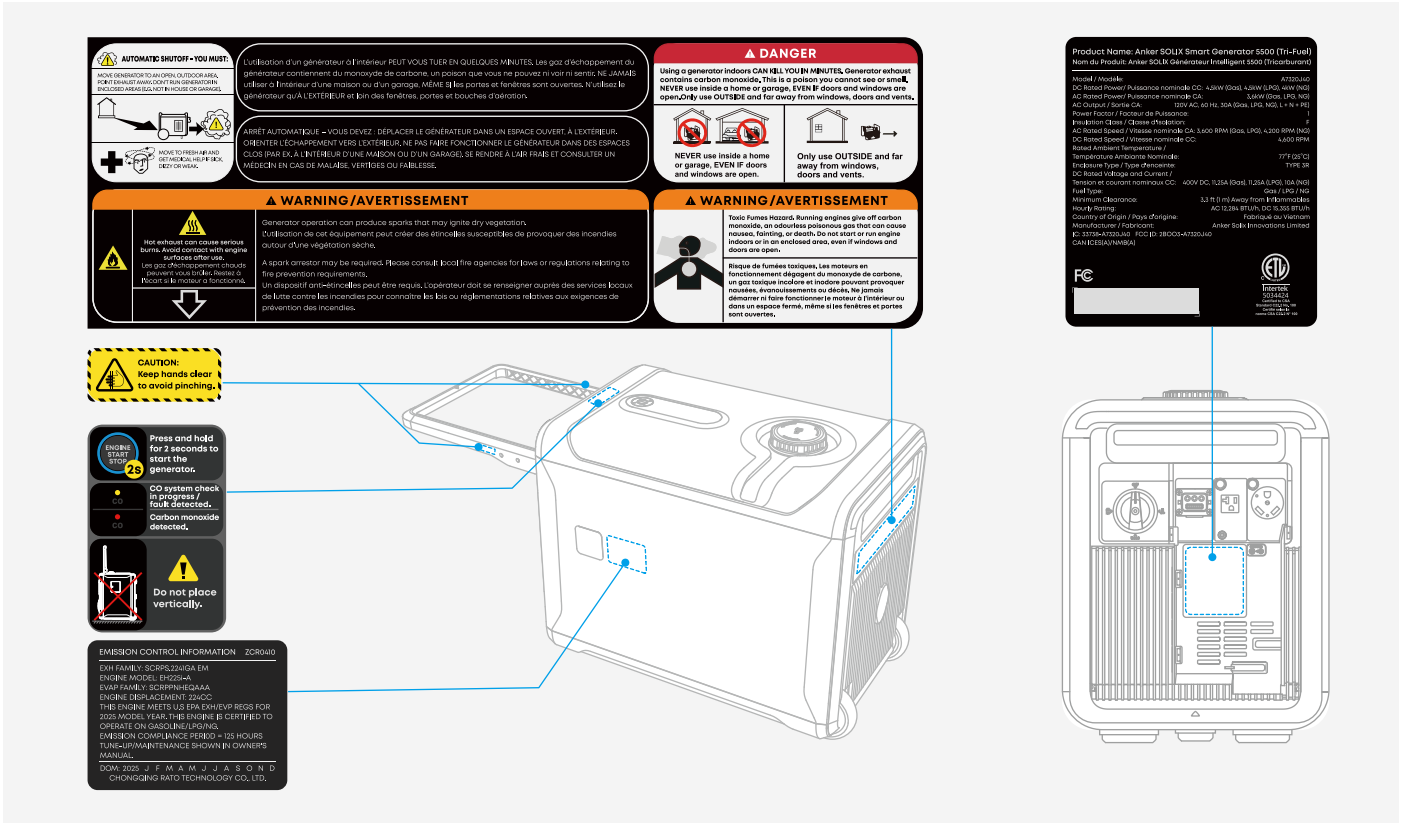


## 12.2 Important Safety Instructions

**SAVE THESE INSTRUCTIONS** · This document contains important instructions that must be followed during installation, use, and maintenance.

Read all instructions before installing, using, and maintaining the equipment. Do not make any changes or create settings that are not described in this document. If physical injury, loss of data, or damage is caused by failure to follow instructions, the warranty does not apply.

### Safety Symbols

| Symbols | Description |
|---|---|
| DANGER | **Danger**<br>Indicates a highly risky hazard. Failure to avoid this hazard could result in death or serious injury. |
| WARNING | **Warning**<br>Indicates a moderately risky hazard. Failure to avoid this hazard could result in death or serious injury. |

| | |
|---|---|
| CAUTION | **Caution**<br>Indicates a low-risk hazard. Failure to avoid this hazard could result in minor or moderate injury. |

## Carbon Monoxide Hazards

**DANGER**

- Stay alert with carbon monoxide detectors.
- Generator exhaust contains carbon monoxide, a colorless, odorless, poisonous gas. Breathing carbon monoxide will cause nausea, dizziness, fainting or death. If you start to feel dizzy or weak, move to fresh air immediately.
- Operate the generator outdoors only in a well-ventilated area and far away from windows, doors, and vents.
- Using a generator indoors can kill you in minutes.
- Keep the engine exhaust pointed away from people and buildings.
- Never use the generator in the home or in partly enclosed areas such as garages.
- Never use the generator inside any building even if doors and windows are open, including garages, basements, crawl spaces and sheds, enclosure or compartment, including the generator compartment of a recreational vehicle.
- Do not allow exhaust fumes to enter a confined area through windows, doors, vents or other openings.
- Install battery-operated carbon monoxide alarms or plug-in carbon monoxide alarms with battery backup.
- Tampering with the carbon monoxide module will result in a hazardous condition and will void your warranty.
- Removing the carbon monoxide module will prevent the generator from starting.

## Fuel Hazards

**DANGER**

### Gasoline and Gasoline Vapors:

- Gasoline, gasoline vapors, propane and natural gas are highly flammable and explosive.
- Fire or explosion can cause severe burns or death.
- Gasoline is a liquid fuel. The resulting gasoline vapors are highly flammable and explosive, and can cause fire or explosion if ignited.
- Gasoline is a skin irritant and needs to be cleaned up immediately if spilled on skin or clothes.
- Gasoline has a distinctive odor to help detect leaks quickly.
- In any petroleum gas fire, flames should not be extinguished unless the fuel supply

valve also can be turned off. Extinguishing the fire without stopping the fuel supply could create an explosion hazard.

- Gasoline vapors expand and contract with ambient temperatures. Never fill the gasoline tank past the red full indicator on the fuel filter, as gasoline vapors needs room to expand if temperatures rise.
- Never place a gasoline container, gasoline tank, LPG cylinder or any combustible material in the path of the exhaust stream during operation of the engine.

**WARNING**

**Propane / Liquefied Petroleum Gas (LPG) and LPG Vapors:**

- LPG is a hydrocarbon gas that exists in a liquefied form and its vapors are highly flammable and explosive.
- LPG and its vapors are under pressure and can cause a fire or explosion if ignited.
- LPG vapors are heavier than air and will settle in low places while dissipating.
- LPG itself is odorless and tasteless. For safety, a chemical is added to give it an odor to help detect leaks quickly.
- If a leak is detected, immediately turn off the gas supply.
- In the event of an LPG fire and only when safe to do so, first close the regulator valve off and then use a dry powder extinguisher to put out the fire. Extinguishing the fire before closing the valve may create an explosion hazard.
- Always keep the LPG cylinder in an upright position.
- LPG is a skin irritant and can cause severe cold burns similar to frostbite.
- Always wear proper protective gloves when connecting to and disconnecting from a propane bottle.
- Always keep LPG away from sparks, open flames, pilot lights, heat and other sources of ignition.
- Never use a gasoline container, gasoline tank, LPG connector hose, LPG cylinder or any other fuel item that is broken, cut, torn or damaged.
- Risk of explosive gas mixture. Read all instructions in this guide before using the generator.

**Natural Gas (NG) and NG Vapors:**

- NG vapors are highly flammable and explosive.
- NG vapors can cause a fire or explosion if ignited.
- NG itself is odorless and tasteless. For safety, a chemical is added to give it an odor to help detect leaks quickly.
- NG is lighter than air and will collect in higher areas.
- If a leak is detected, immediately turn off the gas supply.

**When Adding or Removing Gasoline:**

· Do not light or smoke cigarettes.

· Always stop the engine and allow it to cool for a minimum of two minutes before refueling.

· Always loosen the gasoline cap slowly to release vapor pressure and to keep fuel from escaping around the gasoline cap.

· Always replace and tighten the gasoline cap securely after fueling.

· Never remove the gasoline cap or add gasoline while the engine is running or when the engine is hot.

· Only fill or drain gasoline outdoors in a well-ventilated area.

· Do not pump gasoline directly into the smart generator at the gas station.

· Always store gasoline in an EPA/CARB compliant container or to transfer the gasoline to the smart generator.

· Do not overfill the gasoline tank.

· Always keep gasoline, propane and natural gas vapors away from sparks, open flames, pilot lights, heat and other sources of ignition.

**When Starting the smart generator:**

· Do not attempt to start a damaged generator.

· Always check that the gasoline cap, air filter, spark plug, fuel lines and exhaust system are properly in place.

· Always allow spilled gasoline to evaporate fully before attempting to start the engine.

· Always check the connections of the supply hose for leaks before using LPG or NG fuel.

· Always be certain that the smart generator is resting firmly on level ground.

**When Operating the smart generator:**

· Do not move or tip the smart generator during operation.

**When Transporting or Servicing the smart generator:**

• Disconnect the starter battery.

• Disconnect the spark plug wire.

• Always check that the engine switch is in the off position and the gasoline tank is empty.

• Always check that the LPG or NG supply hose is disconnected and stored securely away from the generator after use.

### When Storing the Generator:

- Always store away from sparks, open flames, pilot lights, heat and other sources of ignition.
- Never store the generator, gasoline or LPG cylinders near furnaces, water heaters, or any other appliances that produce heat or have automatic ignitions.

### Electrical Hazards

**DANGER**

- The generator produces powerful voltage.
- Do not touch bare wires or receptacles.
- Do not use electrical cords that are worn, damaged or frayed.
- Use only the original or certified electrical cords for proper application.
- Do not operate the generator in wet weather.
- Do not allow children or unqualified persons to operate or service the generator.
- Use a ground fault circuit interrupter (GFCI) in damp areas and areas containing conductive material such as metal decking.

**WARNING**

- Spark from removed spark plug wire can result in fire or electrical shock.
- When servicing the generator:
  a. Disconnect the spark plug wire and place it where it cannot contact the plug or any other metal object.
  b. Do not check for spark with the plug removed.
  c. Only use approved spark plug testers.

**CAUTION**

- Exceeding the generator's running capacity can damage the generator and/or electrical devices connected to it.
- Do not overload the generator.
- Do not tamper with the governed speed.
- Do not modify the generator in any way.
- Start the generator and allow the engine to stabilize before connecting electrical loads.
- Connect electrical equipment in the off position, and then turn them on for operation.
- Turn electrical equipment off and disconnect before stopping the generator.

## Others

**DANGER**

- Operate equipment with guards in place.
- Rotating parts can entangle hands, feet, hair, clothing and/or accessories, resulting in possible amputation or severe laceration.
- Keep hands and feet away from rotating parts.
- Tie up long hair and remove jewelry.
- Do not wear loose-fitting clothing, dangling drawstrings or items that could become caught.
- Risk of electric shock. Do not touch the uninsulated portion of output connector or uninsulated battery terminal.

**WARNING**

- Do not use the generator for medical and life support uses.
- In case of emergency, immediately contact the fire department or other relevant emergency response team.
- Inform your electricity provider immediately if you or anyone in your household depends on electrical equipment to live.
- Inform your electrical provider immediately if a loss of power would cause you or anyone in your household to experience a medical emergency.
- Rapid retraction of the starter grip will pull hand and arm towards the engine faster than you can let go, which could result in broken bones, fractures, bruises or sprains. Unintentional startup can result in entanglement, traumatic amputation or laceration.
- When starting the engine, pull the starter grip slowly until resistance is felt and then pull rapidly to avoid kickback.
- Do not start or stop the engine with electrical devices plugged in and turned on.
- Make sure the generator is properly grounded.
- To charge the starter battery, use a certified adapter with a DC output of 12V, a minimum power rating of 45W, and a DC5521 port.
- Use only 12.8V Lithium-ion rechargeable battery. Other types of batteries may burst causing personal injury and damage.
- Running engines produce heat. Severe burns can occur on contact. Combustible material can catch fire on contact.
- Do not touch hot surfaces.
- Avoid contact with hot exhaust gases.
- Allow equipment to cool before touching.
- Maintain at least 3 ft (91.4 cm) of clearance on all sides to ensure adequate cooling.
- Maintain at least 5 ft (1.5 m) of clearance from combustible materials.
- Although the generator contains a spark arrestor, maintain a minimum distance of 5 ft (1.5 m) from dry vegetation to prevent fires.

- When moving, storing, or operating the generator, ensure it remains upright at all times. Placing it on its side may prevent the generator from starting, and could cause engine oil to leak, potentially damaging the engine or your property.

**CAUTION**

- Improper treatment or use of the generator can damage it, shorten its life or void the warranty.
- Use the generator only for intended uses.
- Operate only on level surfaces.
- Do not expose the generator to excessive moisture, dust, or dirt.
- Do not allow any material to block the cooling slots.
- If connected devices overheat, turn them off and disconnect them from the generator.
- Only use Anker SOLIX DC Charging Cable (3m or 10m) for the DC output port of the generator.
- Always check with local regulations and a licensed electrician prior to installing or connecting an electrical appliance.
- Do not use the generator if:
  - Electrical output is lost;
  - Equipment sparks, smokes or emits flames;
  - Equipment vibrates excessively.

# 13. Appendices

## Appendix 1. Circuit Diagram

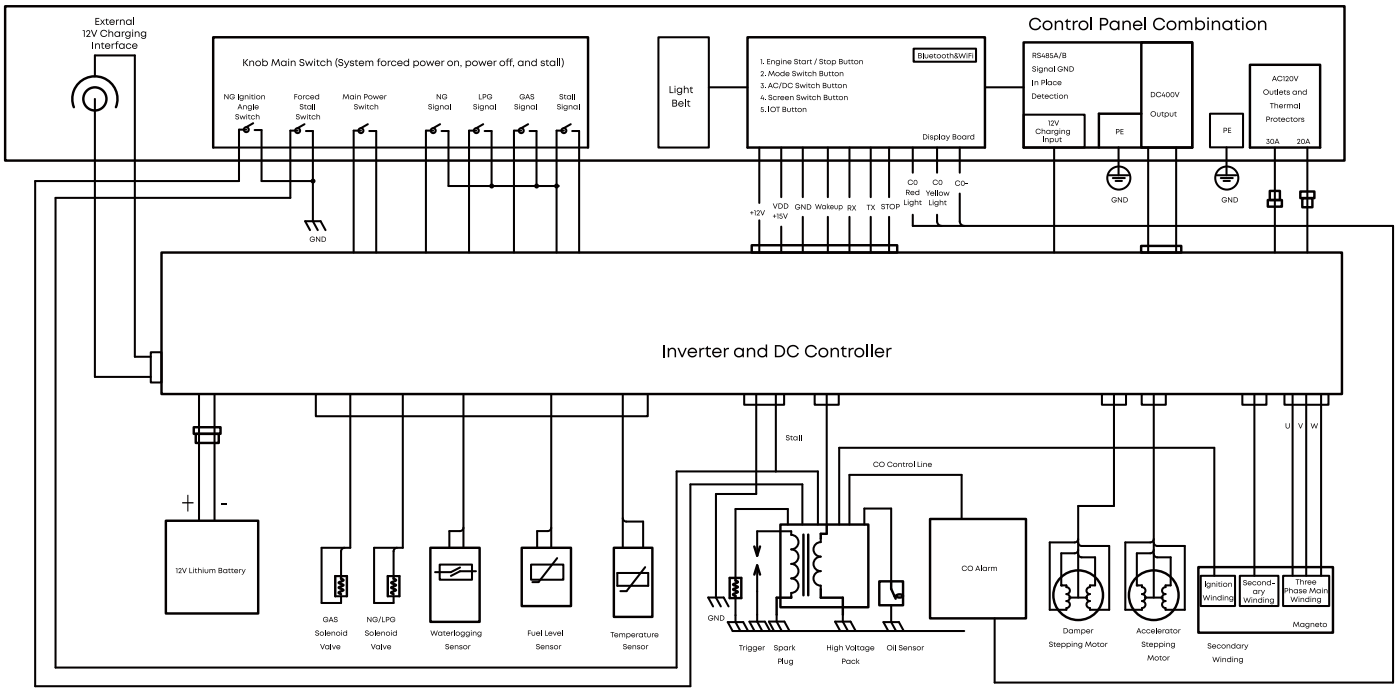

# Appendix 2. Generator Exercise Mode

Perform generator exercise regularly to maintain engine performance, keep parts lubricated, and protect the fuel system. There are two exercise modes: manual exercise and regular exercise.

## Manual Exercise

Manual exercise lets you set a routine interval for generator exercise. The app sends a reminder at each interval, and you manually start the smart generator to perform the exercise.

### Requirements

· The smart generator is connected to Wi-Fi or Bluetooth.

· Fuel and engine oil are adequate.

### How to Set Up

1. Open **Exercise Mode** in the Anker app.
2. Select **Manual Exercise**.
3. Set the **Interval Period**.
4. Slide to start the engine when you receive a reminder.

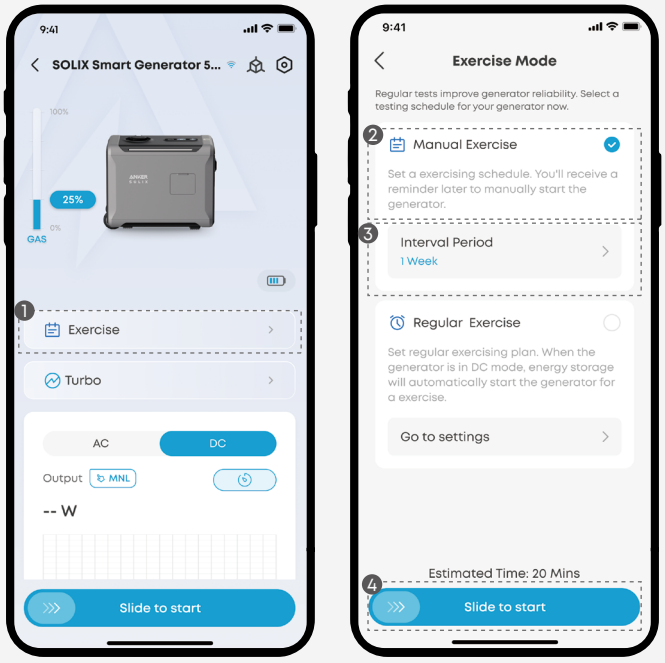

## Regular Exercise

Regular exercise automatically starts the smart generator on a preset schedule.

### Requirements

· The smart generator is connected to E10 and set to DC mode.

· Fuel and engine oil are adequate.

### How to Set Up

1. Open **Exercise Mode** in the Anker app.
2. Select **Regular Exercise**.
3. Open the settings page.
4. Set the **Interval Period** and **Start Time**.
5. Save the schedule. The smart generator will start automatically as scheduled.

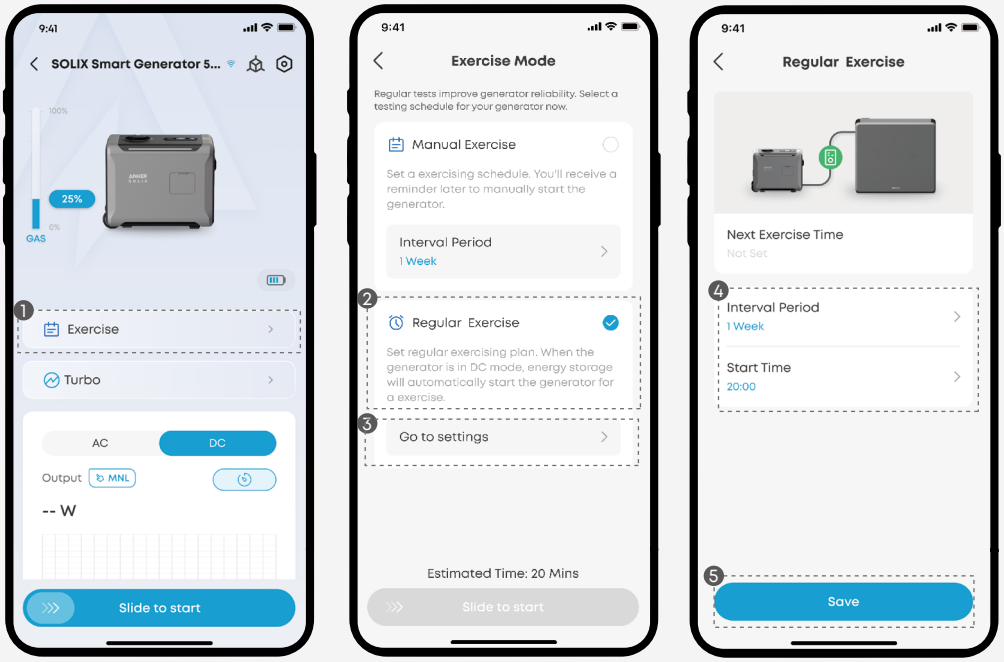


## Appendix 3. Starter Battery Replacement

Replace the starter battery when it malfunctions or no longer charges. Contact customer support for a new battery. The cost of replacement will vary based on your warranty status.

1. Turn off the smart generator and disconnect all connected devices.
2. Remove the maintenance cover.
3. Disconnect the battery connectors.

4. Unscrew and remove the old battery.

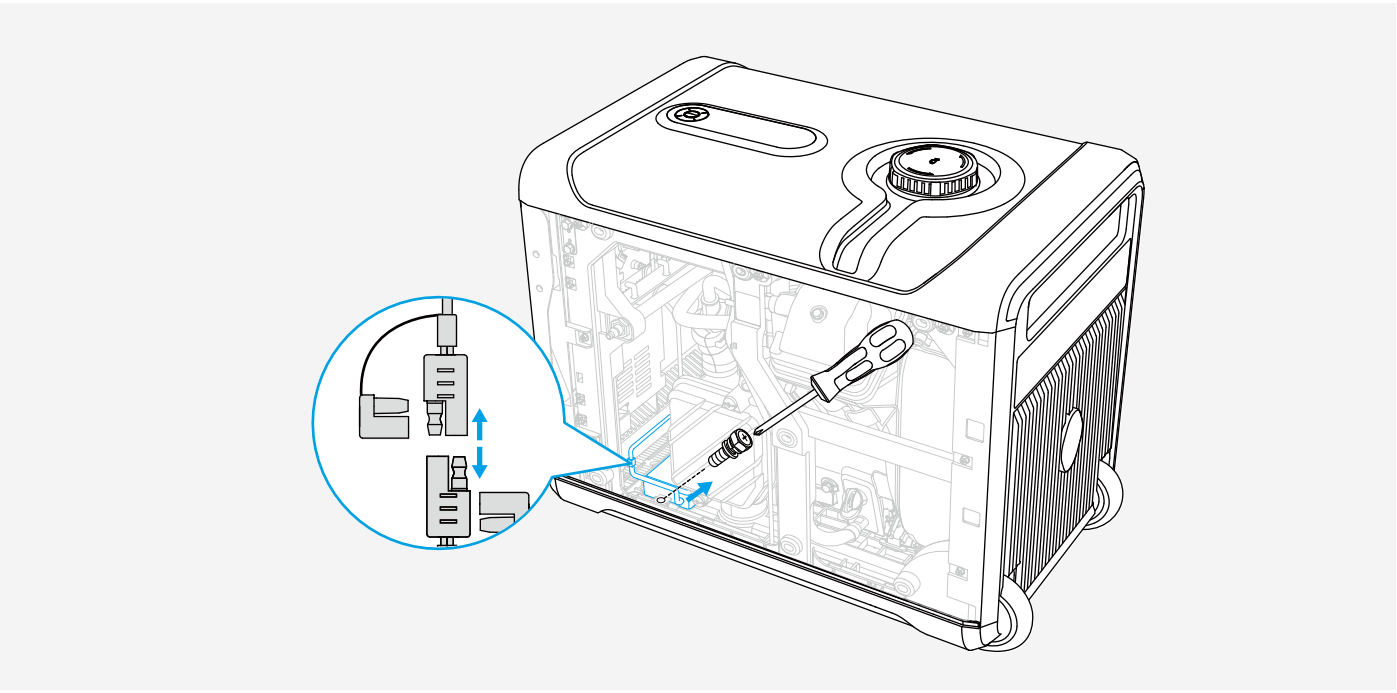

5. Insert the new battery and screw it in place.
6. Connect the battery connectors.
7. Install the maintenance cover.

## Appendix 4. Storage and Transportation

Follow the steps below to prepare the smart generator for long-term storage or safe transportation. These measures prevent fuel degradation, corrosion, and component damage.

### Drain Gasoline

You can run the generator to burn off the remaining gasoline, or drain the gasoline by following the steps below.

1. Turn the engine switch to GAS.
2. Remove the fuel filter, drain the remaining fuel on it, and place the fuel filter back.
3. Extend the drain hose into a designated container.

4. Loosen the fuel drain bolt on the carburetor.

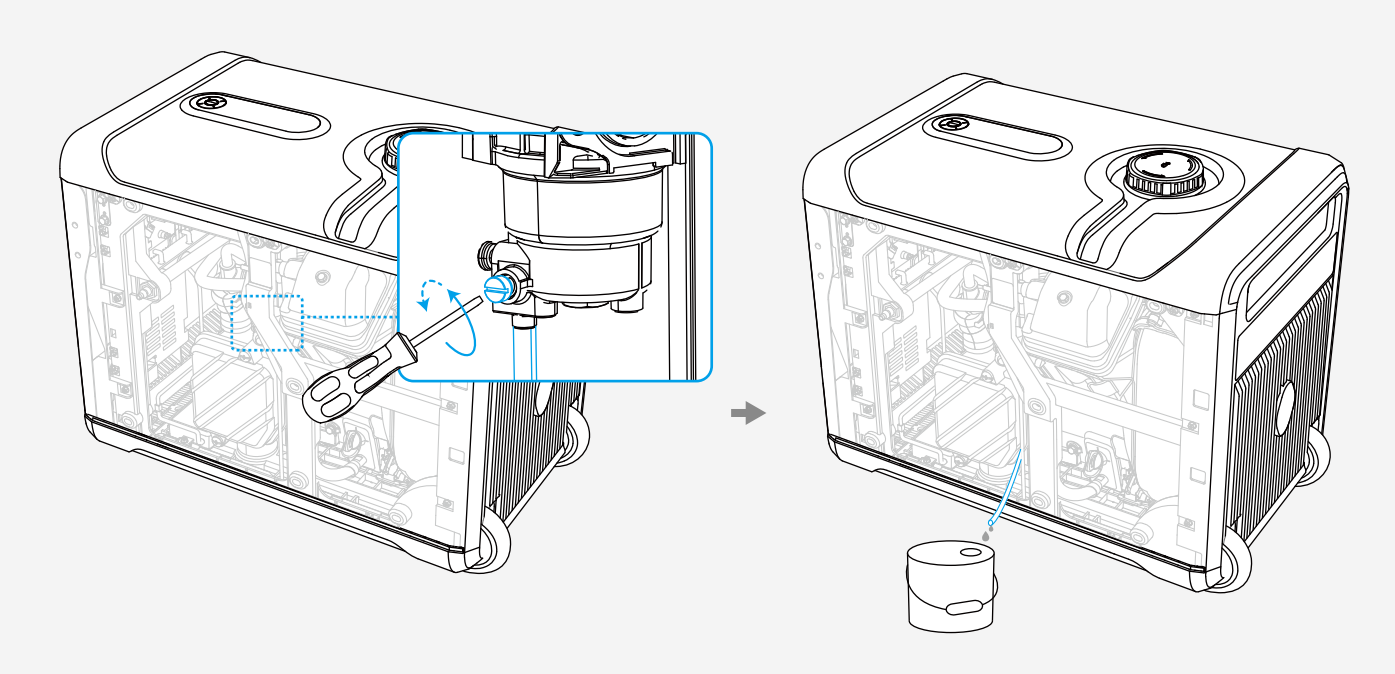

5. After the fuel is completely drained, tighten the fuel drain bolt.
6. Wipe away any spilled fuel with a clean soft cloth.
7. Turn the engine switch to OFF.

### Disconnect LPG / NG Supply

1. Disconnect the smart generator from LPG cylinder or NG hose.
2. Seal the LPG / NG inlet with the protective cover.

### Lubricate the Generator Parts

Lubricate the generator parts prone to rust, such as the engine body and piston rings.

1. Remove the spark plug.
2. Inject 0.34 oz (10 mL) of engine oil.
3. Install the spark plug.
4. Pull the starter grip for several minutes to fully lubricate the cylinder block.

   Pull the starter grip until it becomes tight to prevent the cylinder block and valves from rusting.

### Charge the Starter Battery

Disconnect the starter battery before storage. Charge the starter battery every 3 months using a certified adapter (DC 12 V, ≥ 45 W, DC5521 port).

### Store the Smart Generator

1. Make sure the maintenance cover is installed securely.
2. Turn the engine switch to OFF.
3. Seal the LPG / NG inlet with the protective cover.
4. Wipe the smart generator's surface clean, place the smart generator in a well-ventilated and dry place, and cover it.
5. Store the generator at an ambient temperature between -22°F and 140°F (-30°F and 60°C).

### Use after Storage

If the smart generator is stored with fuel in the fuel tank and carburetor, conduct servicing as required in the table below before using it again.

| Storage Duration | Recommended Servicing Procedure to Prevent Difficult Startups |
|---|---|
| Within 1 month | No preparation needed |
| 1 to 2 months | Drain old fuel and refill fresh fuel |
| 2 months to 1 year | 1. Drain old fuel and refill fresh fuel<br>2. Drain the fuel from the Carburetor Drain Cup [1]<br>3. Drain the fuel from the fuel filter [2] |
| Over 1 year | 1. Drain old fuel and refill fresh fuel<br>2. Drain the fuel from the Carburetor Drain Cup [1]<br>3. Drain the fuel from the fuel filter [2] |

[1] Loosen and remove the fuel drain bolt and drain all the fuel out of the carburetor. Drain the fuel into a suitable container, and screw in and tighten the fuel drain bolt.

[2] After turning off the engine switch, remove the fuel filter, empty the gasoline, reinstall the fuel filter, and tighten the cap.

### Transportation

· When moving, storing, or operating the smart generator, ensure it remains upright at all times. Placing it on its side may prevent the smart generator from starting, and could cause engine oil to leak, potentially damaging the engine or your property.

· If the smart generator needs to be transported after running, shut it down and allow it to cool before loading it onto the vehicle. Hot engines and exhaust systems can cause burns and ignite certain materials. To prevent fuel spills during transport, securely position the smart generator upright and turn the engine switch to OFF.

· During transportation, do not drop the smart generator or subject it to impacts.

# Appendix 5. Troubleshooting

| Error Code | Description | Troubleshooting |
|---|---|---|
| E001 | AC Output Short Circuit Fault | 1. Please disconnect all plugs and reinsert them into the AC or restart the generator.<br>2. If the problem persists, it could be due to inverter damage inside the device or wear of the socket's internal wiring. Please upload the log and contact the retailer or Anker customer service center. |
| E002 | DC Output Short Circuit Fault | 1. Please disconnect all plugs and reinsert them into the DC or restart the generator.<br>2. If the problem persists, it could be due to inverter damage inside the device. Please upload the log and contact the retailer or Anker customer service center. |
| E003 | DC Output Overload | The built-in inverter is damaged. Please upload the log and contact the retailer or Anker customer service center. |
| E004 | AC Output Overload | AC load power is too high. Please check:<br>1. See if the device's startup and running power exceed its limit.<br>2. Remove loads. If the fault still occurs, the inverter might be damaged. Please upload the log and contact the retailer or Anker customer service center. |
| E005 | AC Output Under Voltage | The built-in inverter is damaged. Please upload the log and contact the retailer or Anker customer service center. |
| E006 | AC Output Overvoltage | The built-in inverter is damaged. Please upload the log and contact the retailer or Anker customer service center. |
| E007 | DC Output Under Voltage | The built-in inverter is damaged. Please upload the log and contact the retailer or Anker customer service center. |
| E008 | DC Output Overvoltage | The built-in inverter is damaged. Please upload the log and contact the retailer or Anker customer service center. |
| E009 | Unconventional Fault | The magnetoelectric motor or built-in inverter is damaged. Please upload the log and contact the retailer or Anker customer service center. |

| | | |
|---|---|---|
| E010 | Inverter Bus Under Voltage | The built-in inverter is damaged. Please upload the log and contact the retailer or Anker customer service center. |
| E011 | Inverter Bus Overvoltage | The built-in inverter is damaged. Please upload the log and contact the retailer or Anker customer service center. |
| E012 | Relay Fault | The built-in inverter is damaged. Please upload the log and contact the retailer or Anker customer service center. |
| E013 | Device Fault | The built-in inverter is damaged. Please upload the log and contact the retailer or Anker customer service center. |
| E015 | Device Overheating | The internal cylinder temperature is too high. Please check for the following issues:<br>1. See if the generator exhaust port is obstructed.<br>2. See if the engine spark plug is carbonized.<br>3. Stop the generator for 5 hours, then turn on the main switch again. If the fault still occurs, replace the temperature sensor or inverter.<br>4. If the fault occurs after cooling and running for a while, please contact the retailer for repairs. |
| E016 | Device Overheating | The internal cylinder temperature is too high. Please check for the following issues:<br>1. See if the generator exhaust port is obstructed.<br>2. See if the exhaust port is bouncing back or clogged.<br>3. If the issue persists, please upload the device log and contact the retailer or Anker customer service. |
| E017 | CO Alarm | 1. Check if the generator's operating environment has excessive CO concentration. If so, move it to a well-ventilated area for operation. The generator must be completely rebooted before it can be started up again.<br>2. If environmental factors are ruled out, the issue may be caused by a faulty CO alarm. Please upload the logs and contact your dealer or Anker customer service. |
| E018 | Insufficient Oil | 1. Check if the remaining oil is too low. If so, add it to the proper level.<br>2. Check if the oil is severely dirty. If so, replace.<br>3. If the issue continues, the oil sensor may be damaged. Please upload the device log and contact the retailer or Anker customer service. |

| | | |
|---|---|---|
| E020 | Device Start-Up Failure | Device failed to start. Please check for the following:<br>1. See if the fuel switch is activated.<br>2. See if gas pressure is sufficient and if the fuel circuit is blocked or dirty.<br>3. See if there is sufficient fuel.<br>4. See if the spark plug is carbonized.<br>5. See if the oil and air filters need to be replaced. |
| E021 | Abnormal Shutdown | The generator abnormally shuts down. Please check for the following issues:<br>1. Ensure adequate fuel supply:<br>· For NG or LPG: Valve may not be fully open, LPG tank may be low, or too many devices may be using the fuel simultaneously.<br>· For GAS: Gasoline may be low.<br>2. Ensure the air intake at the bottom of the engine is not blocked by debris such as leaves or plastic bags.<br>3. Inspect the spark plug for carbon buildup.<br>4. Check if the engine oil and air filter require replacement.<br>5. If the issue persists, upload the log and contact your dealer/Anker Customer Service Center. |
| E022 | Starter Battery Overvoltage | The starter battery voltage is higher than 14V. Please replace the battery. |
| E023 | Device Fault | The built-in inverter is damaged. Please upload the device log and contact the retailer or Anker customer service. |
| E024 | Boost Start Bus Overvoltage | The built-in inverter is damaged. Please upload the device log and contact the retailer or Anker customer service. |
| E025 | Charging Overvoltage | The built-in inverter is damaged. Please upload the device log and contact the retailer or Anker customer service. |
| E026 | Charging Under Voltage | The built-in inverter is damaged. Please upload the device log and contact the retailer or Anker customer service. |
| E027 | Internal Communication Fault | To resolve this, try the following:<br>1. Restart the generator.<br>2. Unplug the starter battery, wait 30 seconds, then reconnect.<br>3. If the issue is still unresolved, upload the device log and contact the retailer or Anker customer service. |

| | | |
|---|---|---|
| E028 | Abnormal DC Disconnection | A disconnection in the DC line is detected. Please check device connection status. |
| E030 | Water Detected | Please check if water has accumulated inside the generator. If so, please remove the water. If the issue remains unresolved, upload the device log and contact the retailer or the Anker customer service center. |
| E031 | Starter Battery Under Voltage | The starter battery is low. Please select gasoline as fuel and charge the starter battery with an external adapter. If you need to start the generator now, use the starter grip. |
| E032 | Boost MOS Over-temperature | Please check for the following:<br>1. See if the generator air inlet is blocked.<br>2. See if air can flow freely through the exhaust outlet.<br>3. If the problem persists, upload the device log and contact the retailer or Anker customer service center. |
| E035 | Abnormal Engine Speed | Please inspect the generator in the following order:<br>1. Check if LPG or NG pressure is sufficient (e.g., insufficient fuel, low temperature);<br>2. Verify ambient temperature and altitude against the rated power in the manual; do not exceed capacity;<br>3. Check if engine oil requires replacement;<br>4. Check if the filter element is dirty and requires cleaning;<br>5. Check if the spark plugs have carbon buildup;<br>6. Check if the fuel circuit is dirty or clogged;<br>7. If the issue persists after these checks, seek professional assistance to inspect the following:<br>8. Verify the carburetor throttle stepper motor wiring harness is properly connected to the inverter; if not, connect it;<br>9. Verify the auxiliary winding of the magnetic motor is properly connected to the inverter; reconnect if loose;<br>10. Inspect the carburetor for malfunctions (e.g., damaged wiring, mechanical binding); replace if faulty;<br>11. Check the auxiliary winding of the magnetic motor for open circuits or short circuits; replace the powertrain if damaged;<br>12. Examine the inverter for defects; replace if damaged. |

| | | |
|---|---|---|
| E037 | Starter Battery Low | Start-up failed due to low starter battery level. Please select gasoline as fuel and start the generator with the starter grip, or charge the starter battery with an external adapter. If the problem continues, please upload the device log and contact the retailer or Anker customer service. |
| E038 | Upgrade Failure | OTA upgrade failed unexpectedly. Please try again on the app. |
| E039 | Adapter Overvoltage | The output voltage of the adapter charging the starter battery is too high. Please use a 12V output adapter. |

## Appendix 6. Use with Anker SOLIX Portable Power Station

The smart generator can connect with the Anker SOLIX portable power station to create a range extender power system. When connected, the smart generator can automatically start or stop charging the portable power station under preset conditions.

**Supported Model:**

Anker SOLIX F3000 Portable Power Station (A1782)

**Requirements:**

· The smart generator and the portable power station are added to the app and connected through Bluetooth or Wi-Fi.

· Fuel and engine oil are at sufficient levels for operation.

· The starter battery shows at least three bars of charge.

**How It Works**

| | |
|---|---|
| **Stop Condition** | The smart generator stops when battery SOC reaches the stop limit. |
| **Start Condition** | **By SOC**<br>· The smart generator starts when battery SOC drops below the start limit.<br>· The portable power station reserves about 5% battery capacity to guarantee automatic startup.<br>**By Time**<br>· The smart generator starts at a scheduled time within the next 24 hours as a one-time task.<br>· If battery SOC is above the target reserve capacity at the scheduled time, the smart generator does not start. |

| | |
|---|---|
| **Mode Settings** | Define how the smart generator operates after startup by selecting an operation mode and active time.<br>· **Turbo Mode**: Provides maximum power for high-demand loads.<br>· **ECO Mode**: Reduces fuel consumption and noise during operation. |

## How to Set Up

1. Tap the networking icon on the device home page.
2. Select the smart generator and the connected portable power station.
3. Tap **Create Now**. Update firmware if prompted.
4. Confirm Bluetooth pairing.
5. Tap **Done** to open the system home page.

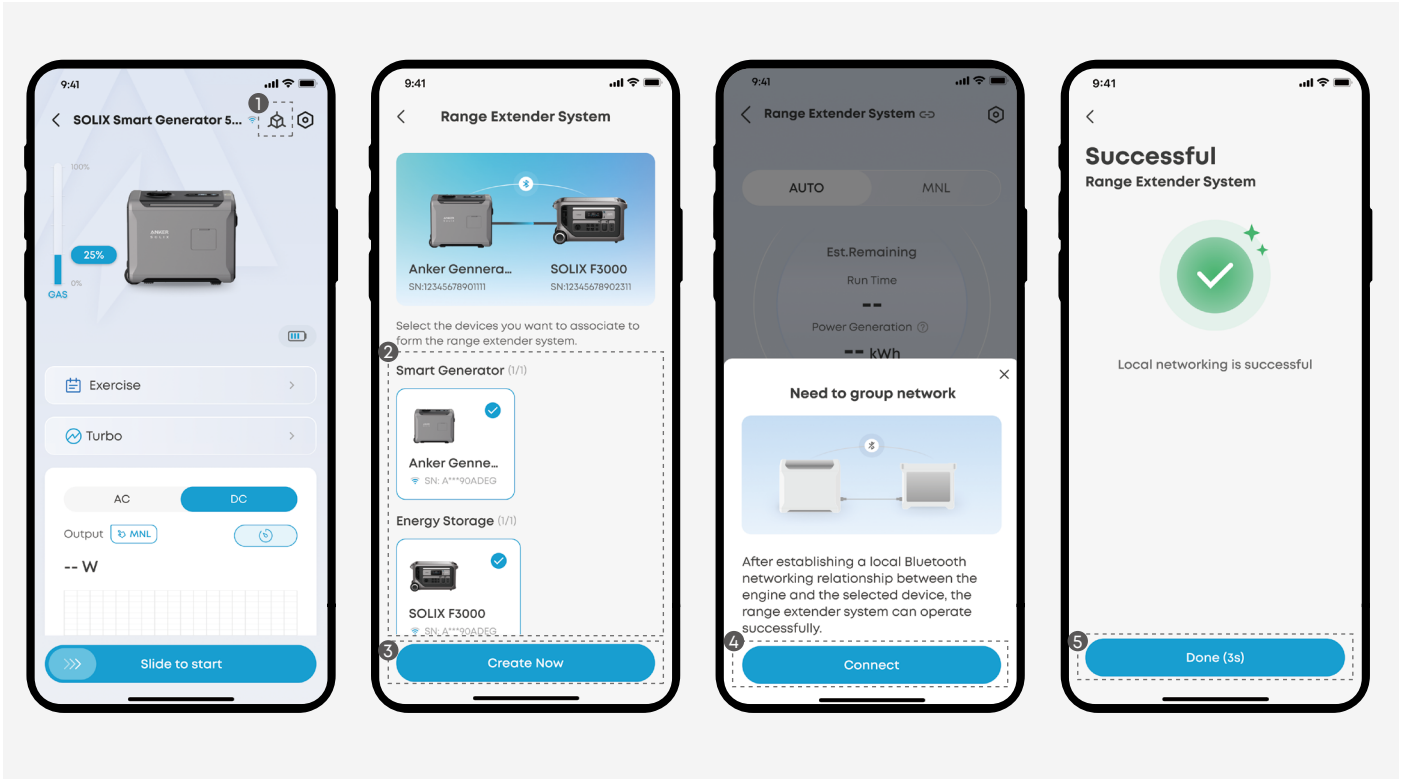

6. Enable the auto start-stop feature.
7. Tap **Power Backup Plan** to open settings.
8. Set the stop condition by dragging the slider.
9. Set the start condition.
   · By SOC: Adjust the start limit by dragging the slider.
   · By Time: Set a preferred start time.
10. Add or modify operation mode.
11. Drag the time bar to adjust the active period.
12. Tap **Save** to apply the settings.

