eufy
SECURITY

QUICK START GUIDE

SoloCam S340

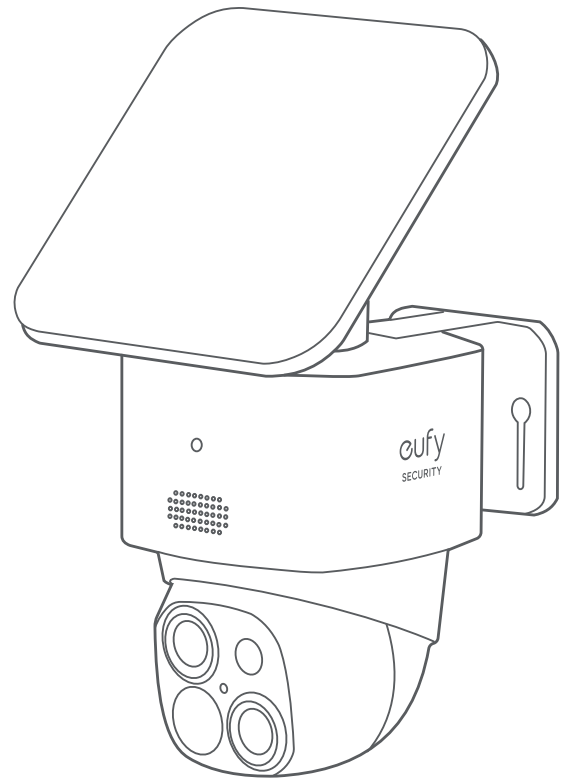

Anker Innovations Limited. All rights reserved. eufy Security and eufy Security Logo are trademarks of Anker Innovations Limited, registered in the United States and other countries. All other trademarks are the property of their respective owners.

PAP 22
Raccolta Carta

51005004075_V3

AT A GLANCE

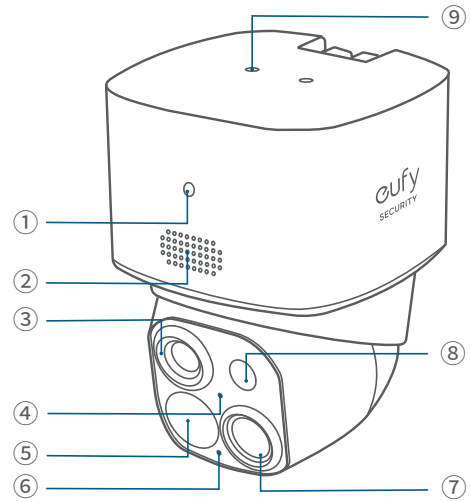

SoloCam S340
Model: T8170

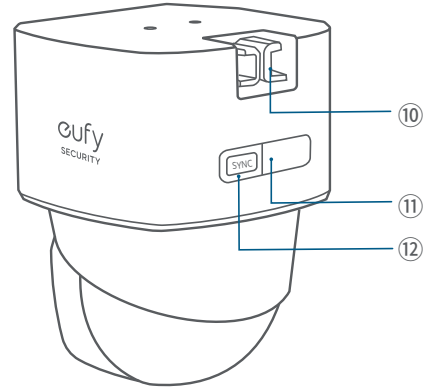

①	LED Indicator	⑦	Wide-Angle Lens
②	Speaker	⑧	LED Light
③	Telephoto Lens	⑨	Solar Panel Mounting Hole
④	Photosensitive Sensor	⑩	Mounting Hook
⑤	PIR Sensor	⑪	USB-C Charging Port
⑥	Microphone	⑫	SYNC Button

CHARGING YOUR CAMERA

Fully charge before first use.

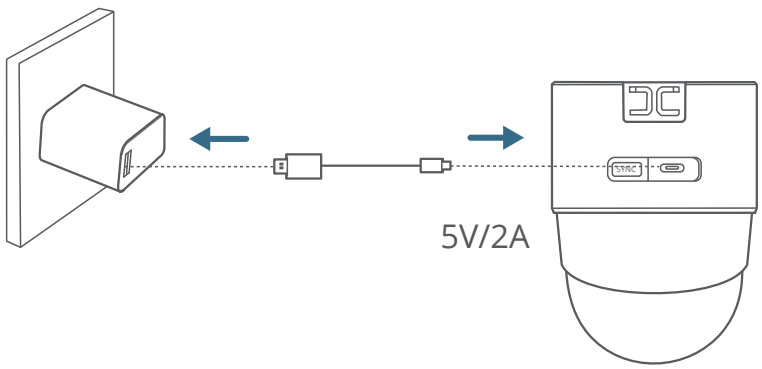

Solid Blue	Charging
Light Off	Fully Charged
Charging Time	8 Hours

SETTING UP THE SYSTEM

1. Download and install the eufy Security app, then sign in or create an account.

Download on the App Store

GET IT ON Google Play

2. Follow the in-app instructions to add the camera to the device list.

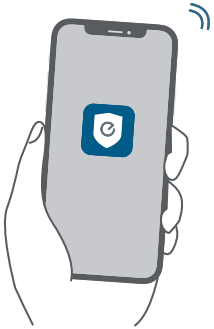

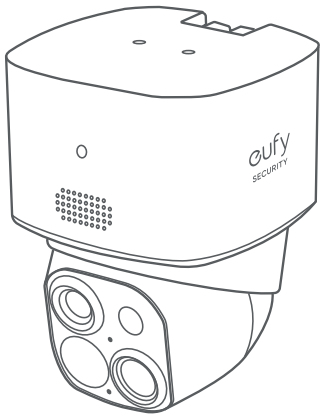

MOUNTING YOUR CAMERA

Select a Location and a Height

Select a location where you can get the desired view. We recommend hanging the camera 7-10 ft (2-3 m) above the ground.

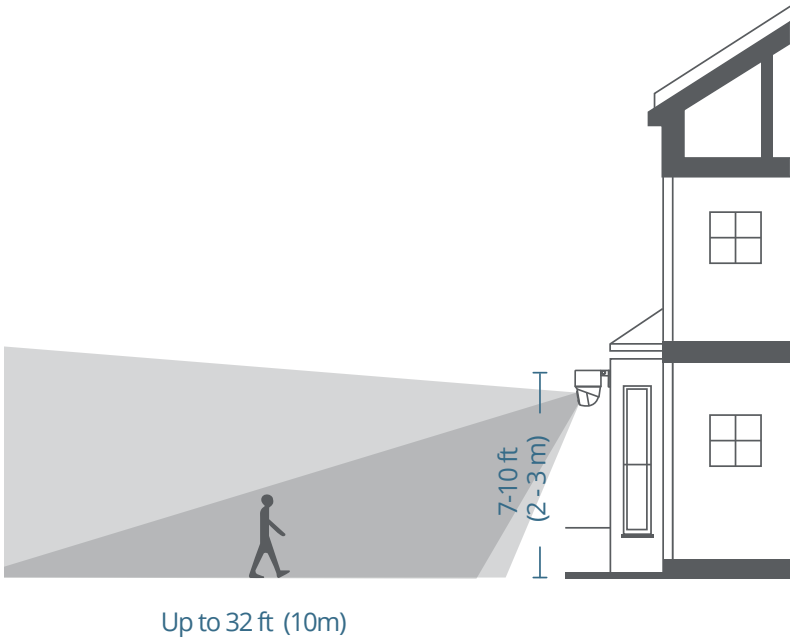

To ensure that no detection is missed, do not install the camera directly facing the monitoring area. Instead, maintain an angle to avoid any potential blind spots.

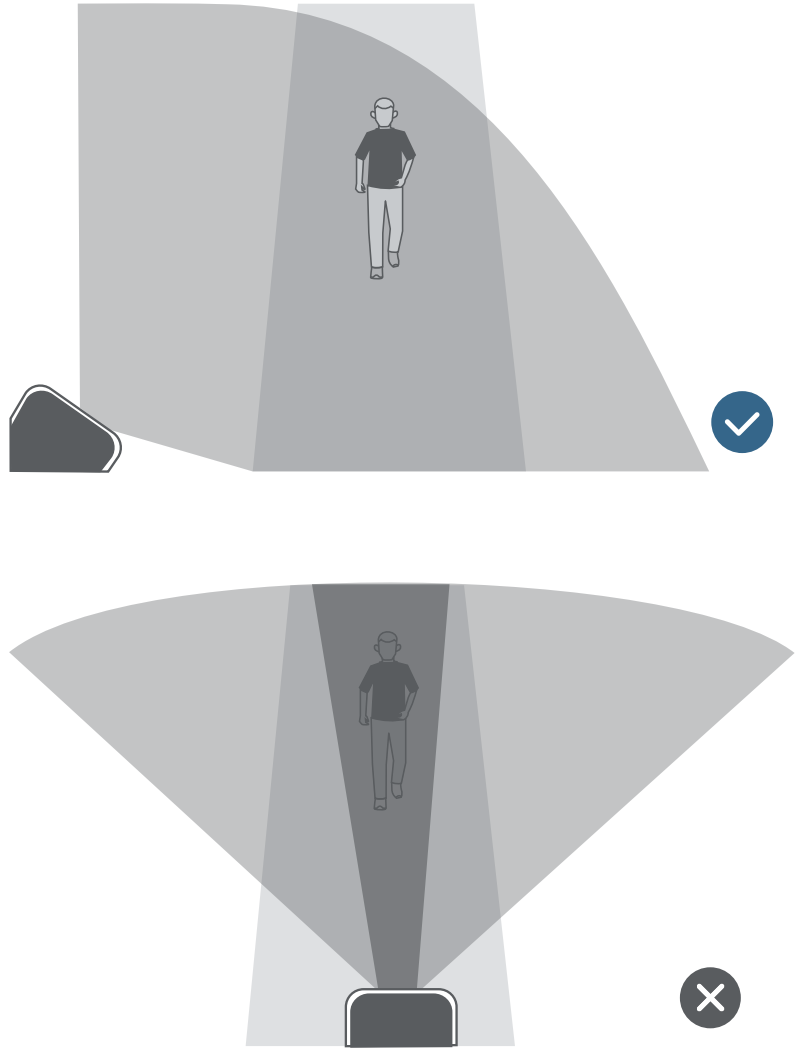

Select a Solar Panel Location

Option 1: Mount the Camera and the Solar Panel Separately (Best for Strong Solar Power)

If the camera is blocked, install the solar panel independently and use the provided USB-C extension cable to get strong solar power. The camera can be mounted on a wall or on the ceiling.

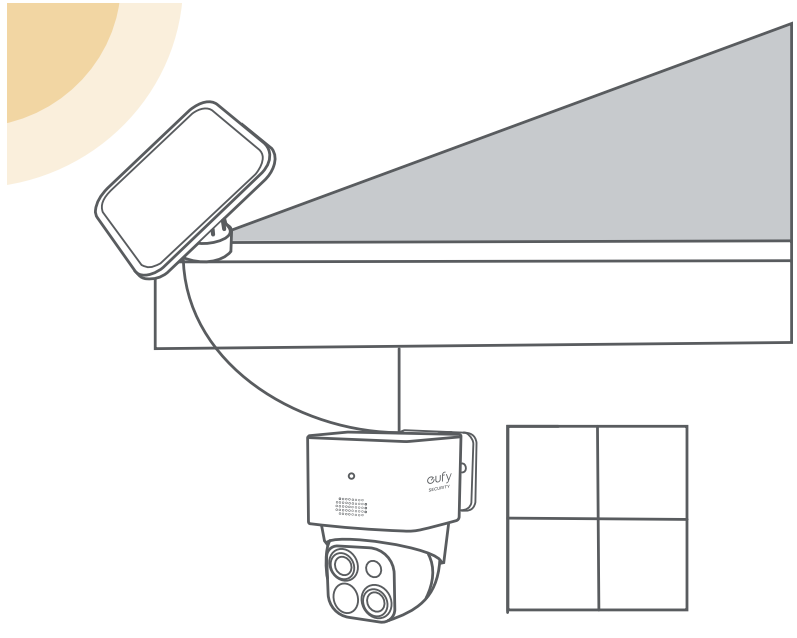

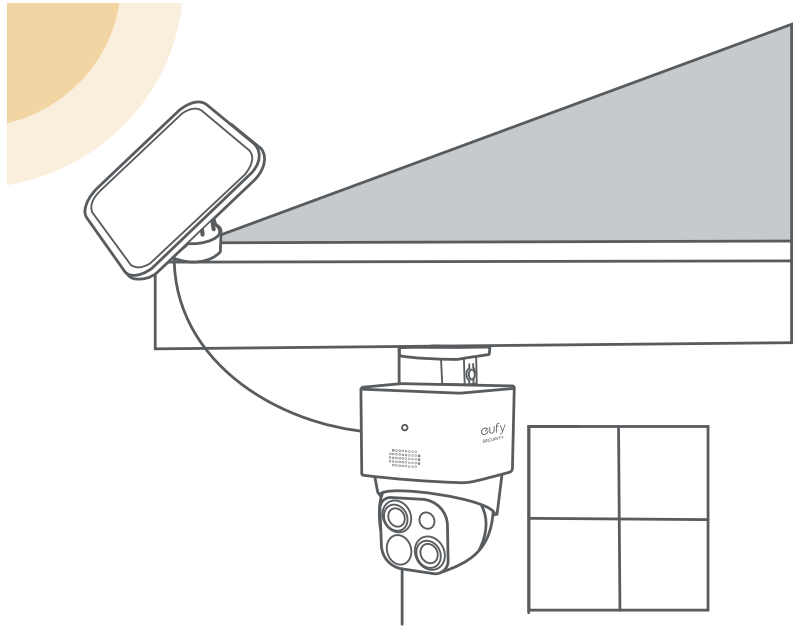

1. Drill holes with a 15/64 inch (5.95 mm) drill bit with the provided positioning card, then insert the anchors into the holes.

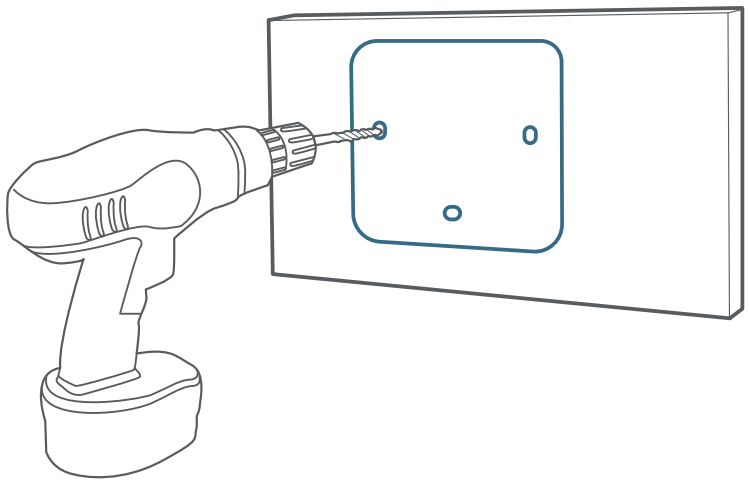

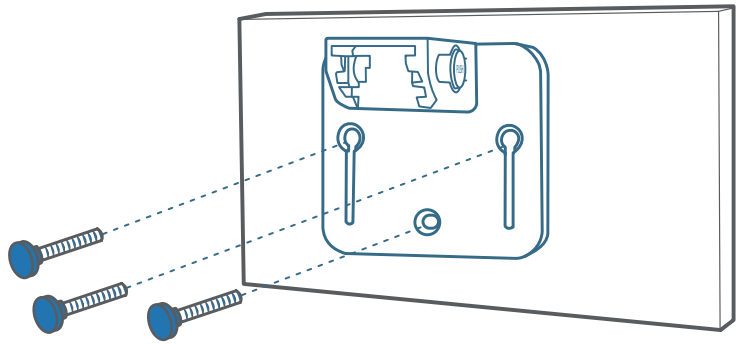

2. Connect the solar panel to the camera using the provided USB-C extension cable.

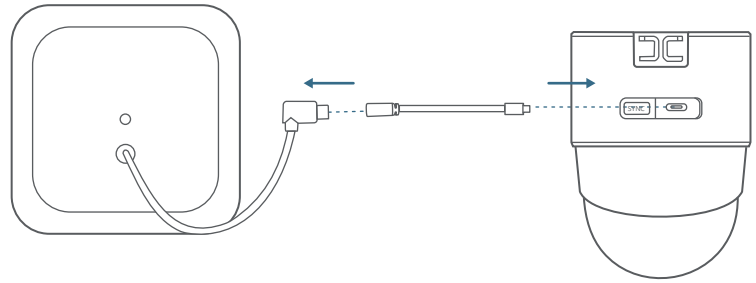

3. Firmly secure the camera onto the mounting bracket.

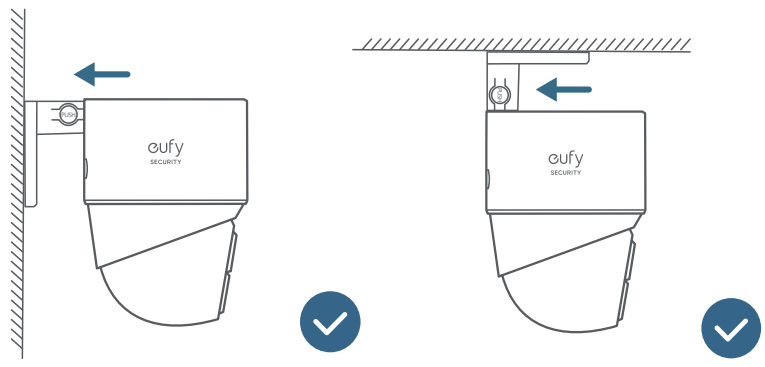

Be careful not to install by mistake.

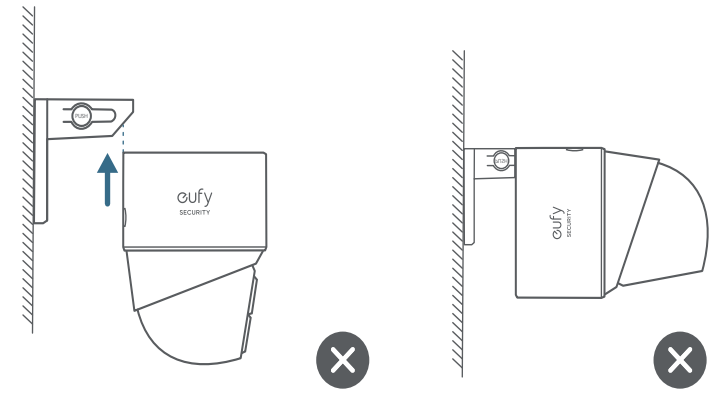

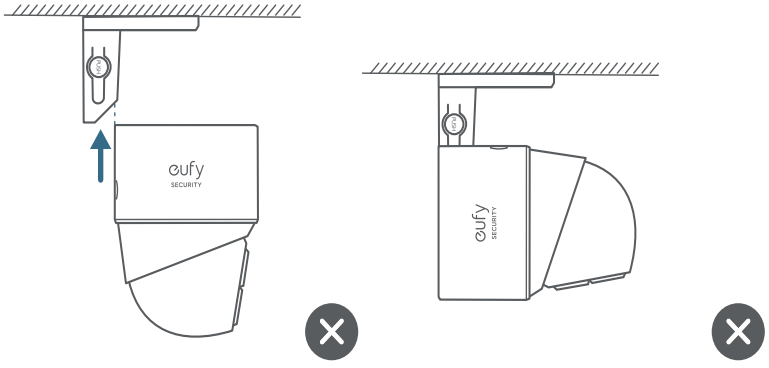

4. Install the mounting bracket of the solar panel in a suitable position.

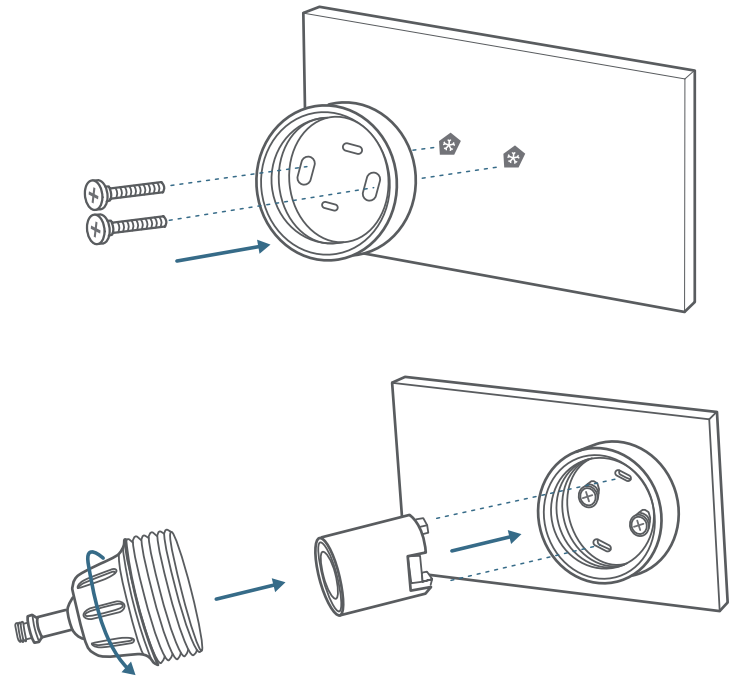

5. Install the solar panel onto its mounting bracket by turning it, then adjust the angle (20°~30° recommended).

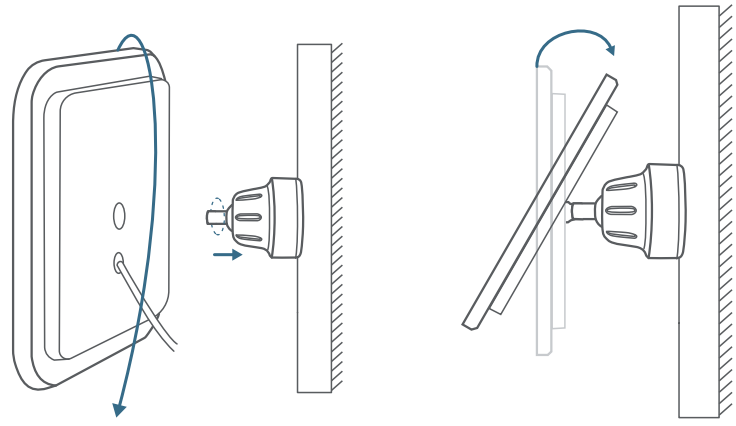

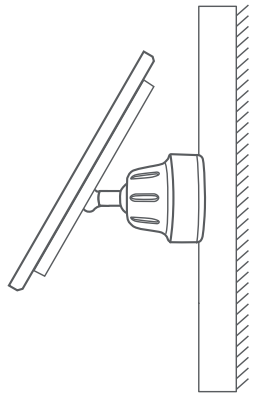

Option 2: Mount the Camera with the Solar Panel Attached (Less Drilling)

If the camera is not blocked, install the solar panel directly on the top of the camera.

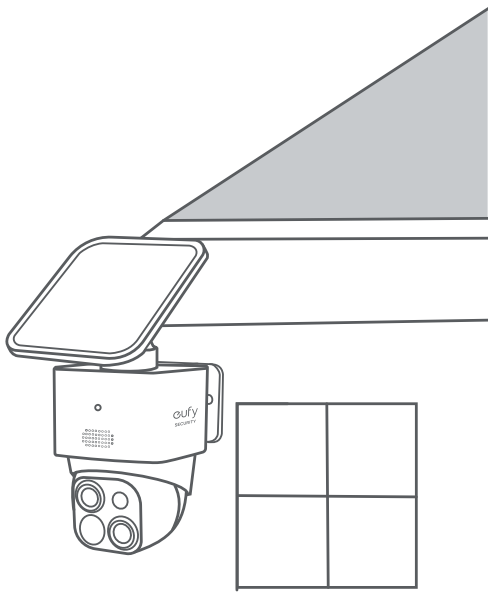

1. Use two 5mm screws to attach the solar panel bracket to the top of the camera.

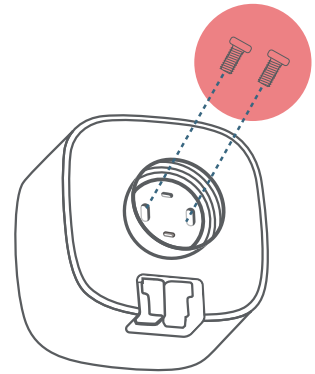

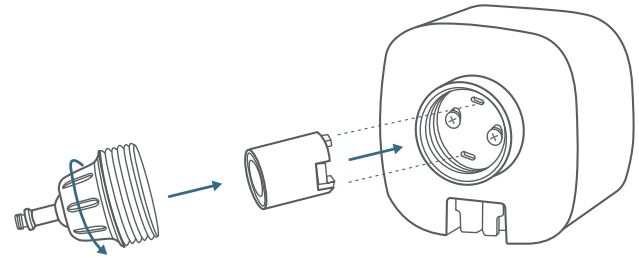

2. Install the solar panel onto the solar panel's mounting bracket by turning it.

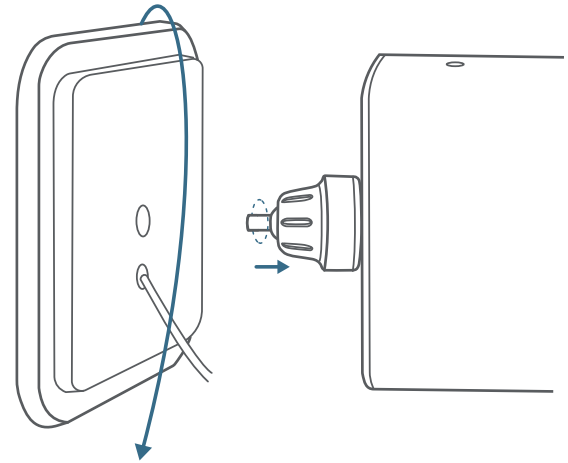

3. Connect the USB-C connector to the USB-C port of the solar panel.

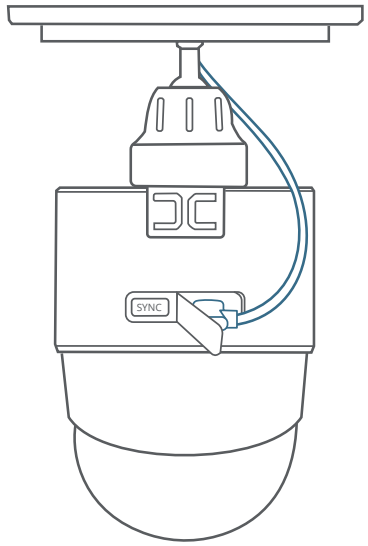

4. Drill holes with a 15/64 inch (5.95 mm) drill bit with the included positioning card, then insert the anchors into the holes.

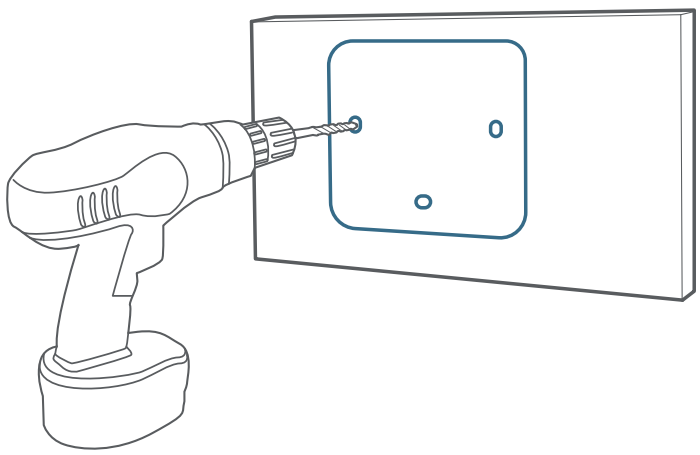

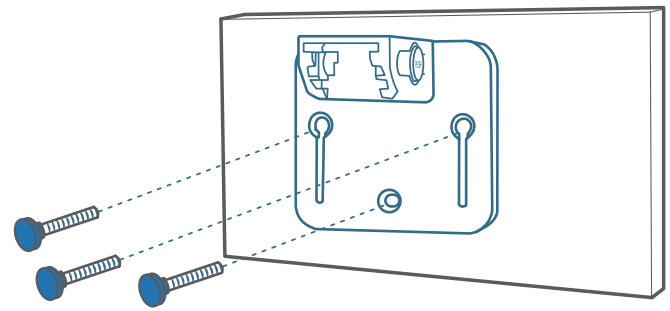

5. Firmly secure the camera onto the mounting bracket and adjust the angle (20º~30º recommended).

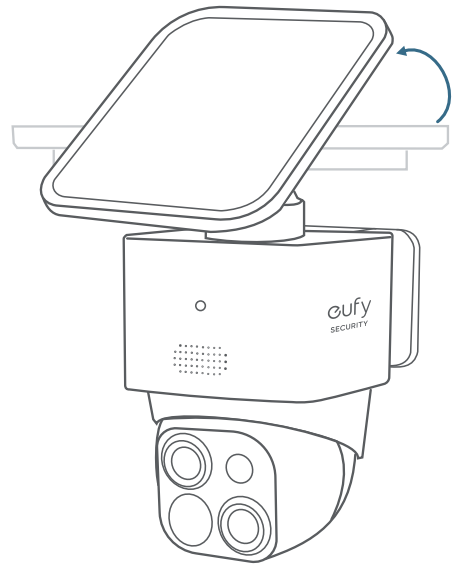

SAFETY

- The suitable temperature for this device and accessories is -20°C to 50°C (Charging temperature is 0°C to 40°C).
- Unless specifically indicated that it is safe to do so in the user guide or instruction manual, do not use this device in an environment that exceeds the recommended low or high temperature.
- Unless specifically indicated that it is safe to do so in the user guide or instruction manual, avoid exposing your device to direct sunshine or excessively wet environments.
- It is recommended to supply the device in an environment with a temperature that ranges from 5°C to 25°C.
- When supplying power, place the device in an environment that has a normal room temperature and good ventilation.

 CAUTION!

THERE IS A RISK OF EXPLOSION IF AN INCORRECT BATTERY TYPE IS USED. DISPOSE OF USED BATTERIES ACCORDING TO THEIR INSTRUCTIONS.

 ATTENTION!

IL EXISTE UN RISQUE D'EXPLOSION EN CAS D'UTILISATION D'UN TYPE DE PILE INCORRECT. ÉLIMINEZ LES PILES USAGÉES CONFORMÉMENT AUX INSTRUCTIONS.

Warning:

- Replacing a battery with an incorrect type may bypass safeguards and create danger;
- Disposal of a battery in a fire or other source of significant heat, or by crushing, or cutting, may result in an explosion as well as leakage of flammable liquids and gases;
- Leaving a battery in an extremely hot environment may result in an explosion as well as leakage of flammable liquids and gases;
- A battery subjected to extremely low air pressure may result in an explosion as well as leakage of flammable liquids and gases.

Attention :

- Le remplacement d'une batterie par un type incorrect peut contourner les protections et créer un danger ;
- L'élimination d'une pile dans un feu ou une autre source de chaleur importante, ou par écrasement ou découpage, peut entraîner une explosion ainsi qu'une fuite de liquides et de gaz inflammables ;
- Le fait de laisser une batterie dans un environnement extrêmement chaud peut entraîner une explosion ainsi qu'une fuite de liquides et de gaz inflammables ;
- Une batterie soumise à une pression d'air extrêmement faible peut provoquer une explosion ainsi qu'une fuite de liquides et de gaz inflammables.

NOTICE

FCC Statement

This device complies with Part 15 of the FCC Rules. Operation is subject to the following two conditions: (1) this device may not cause harmful interference, and (2) this device must accept any interference received, including interference that may cause undesired operation.
Warning: Changes or modifications not expressly approved by the party responsible for compliance could void the user's authority to operate the equipment.
Note: This equipment has been tested and found to comply with the limits for a Class B digital device, pursuant to Part 15 of the FCC Rules. These limits are designed to provide reasonable protection against harmful interference in a residential installation.
This equipment generates, uses and can radiate radio frequency energy and, if not installed and used in accordance with the instructions, may cause harmful interference to radio communications. However, there is no guarantee that interference will not occur in a particular installation. If this equipment does cause harmful interference to radio or television reception, which can be determined by turning the equipment off and on, the user is encouraged to try to correct the interference by one or more of the following measures: (1) Reorient or relocate the receiving antenna. (2) Increase the separation between the equipment and receiver. (3) Connect the equipment into an outlet on a circuit different from that to which the receiver is connected. (4) Consult the dealer or an experienced radio/TV technician for help. FCC Radio Frequency Exposure Statement
The device has been evaluated to meet general RF exposure requirements. The device can be used in fixed/mobile exposure condition. The min separation distance is 20 cm.
Notice: Shielded cables
All connections to other computing devices must be made using shielded cables to maintain compliance with FCC regulations.
The following importer is the responsible party.
Company Name: POWER MOBILE LIFE, LLC
Address: 10900 NE 8TH ST, STE 501, BELLEVUE, WA 98004
Telephone: 1-800-988-7973

IC Statement

This device complies with Industry Canada licence-exempt RSS standard(s). Operation is subject to the following two conditions:
(1) this device may not cause interference, and
(2) this device must accept any interference, including interference that may cause undesired operation of the device.
Le présent appareil est conforme aux CNR d'Industrie Canada applicables aux appareils radio exempts de licence. L'exploitation est autorisée aux deux conditions suivantes:
(1) l'appareil nedoit pas produire de brouillage, et
(2) l'utilisateur de l'appareil doit accepter tout brouillage radioélectrique subi, même si le brouillage est susceptible d'en compromettre le fonctionnement.
This Class B digital apparatus complies with Canadian ICES-003.
Cet appareil numérique de la classe B est conforme à la norme NMB-003 du Canada.

IC RF Statement

When using the product, maintain a distance of 20cm from the body to ensure compliance with RF exposure requirements.
Lors de l'utilisation du produit, maintenez une distance de 20 cm du corps afin de vous conformer aux exigences en matière d'exposition RF.

Your product is designed and manufactured with high quality materials and components, which can be recycled and reused.

This symbol means the product must not be discarded as household waste, and should be delivered to an appropriate collection facility for recycling. Proper disposal and recycling helps protect natural resources, human health and the environment.
For more information on disposal and recycling of this product, contact your local municipality, disposal service, or the shop where you bought this product.

CUSTOMER SERVICE

12-month limited warranty

(US) +1 (800) 988-7973
(UK) +44 (0) 1604 936200
(DE) +49 (0) 69 9579 7960
(中国) +86 400 0550 036
(日本) 03 4455 7823
(AU) +61 3 8331 4800
(Egypt) +20 8000000826
(UAE) +971 8000320817
(Kuwait) +965 22069086
(Saudi Arabia) +966 8008500030

support@eufy.com

Anker Innovations Limited

Unit 56, 8th Floor, Tower 2, Admiralty Centre, 18 Harcourt Road, Hong Kong

@EufyOfficial

@EufyOfficial

@EufyOfficial