What's in the Box

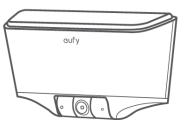

❶



❷

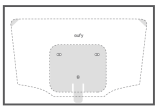

❸



❹

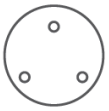

❺

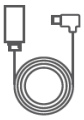

❻

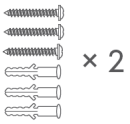

❼

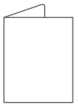

❽

❶ Wall Light Camera
❷ Mounting Plate
❸ Positioning Card
❹ Solar Panel Mounting Bracket
❺ Positioning Sticker for Solar Panel Mounting Bracket
❻ Solar Panel Extension Cable
❼ Screw Pack
❽ Quick Start Guide

Tools You Will Need



❶

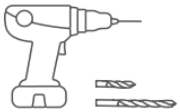

❷



❸



❹

❶ Phillips Screwdriver

❷ Power Drill & Drill Bits

· Pilot holes: 1.5 mm (1/16 in)

· Wall anchors: 6 mm (15/64 in)

❸ Hammer

❹ Ladder

At a Glance

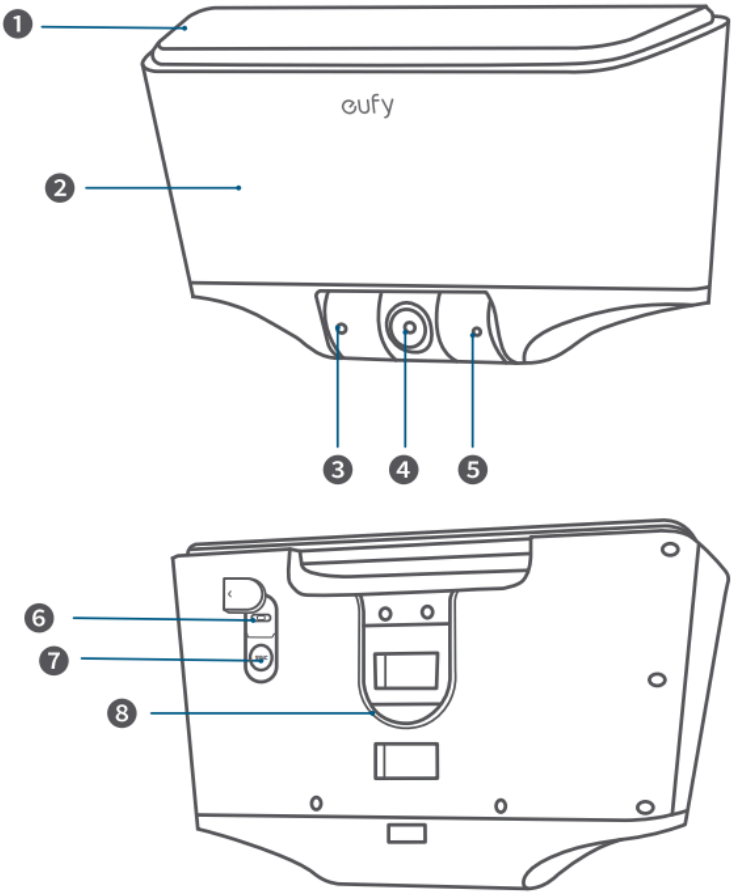

❶ Solar Panel

❷ Wall Light

❸ LED Indicator

Scenario	LED Behavior	Status
Charging	Solid blue	Charging
	Off	Fully charged
Firmware Update	Red and blue flashing alternately	Updating

❹ Camera

❺ Photosenstive Sensor

❻ USB-C Charging Port

❼ SYNC Button

❽ Mounting Hook

Before Mounting

1. Download eufy App (Latest Version)

eufy

Download on the App Store

GET IT ON Google Play

2. Fully Charge the Camera Before First Use

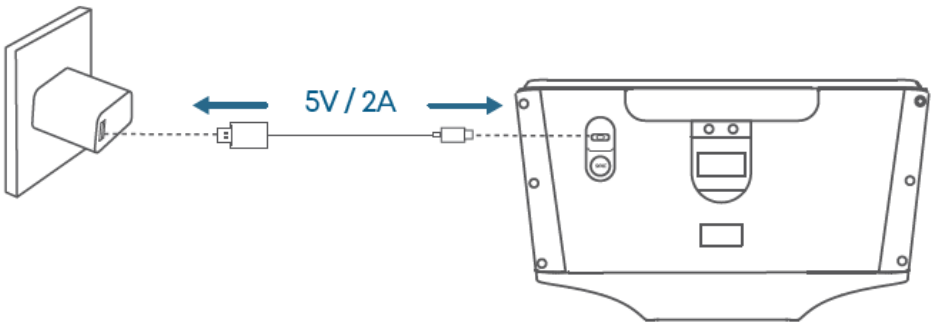

Full charge takes about 6 hours (Fast charging not supported)

You can check the battery level in the app.

3. Add Wall Light Cam S4



4. Choose a Location

In open area:

Recommended height: 1.8 m (6 ft) – 2.5 m (8 ft)

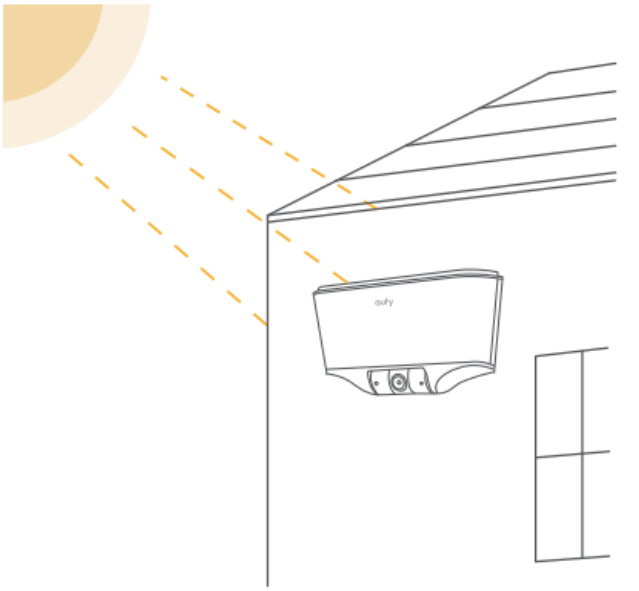

In shaded area (e.g. under the eave):

For improved charging efficiency, detach the solar panel and mount it where sunlight can reach, then connect it to the wall light camera with the extension cable.

- Recommended height: 2.5 m (8 ft) – 3 m (10 ft)
- Keep the solar panel within 2 m (6.5 ft) of the wall light camera.

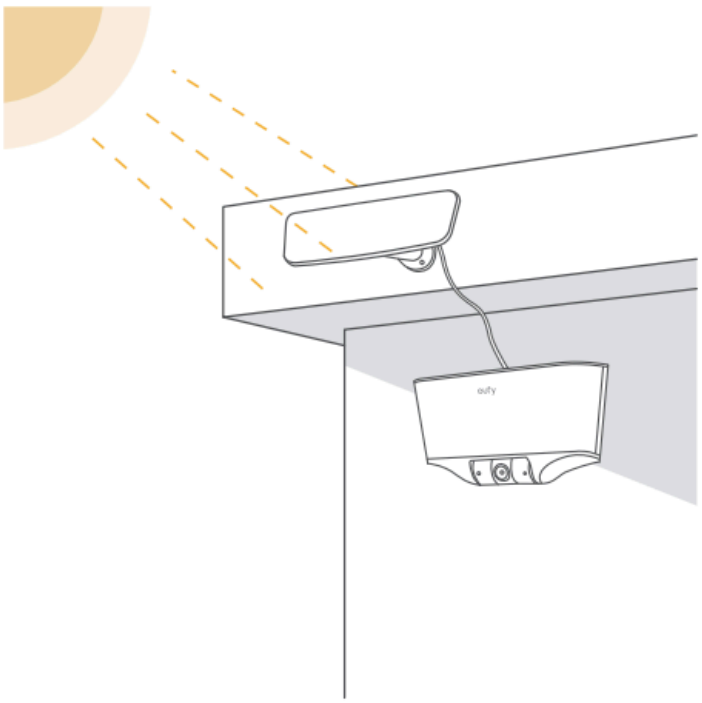

To expand the detection view, install the cameras directly facing the monitoring area rather than at an angle.

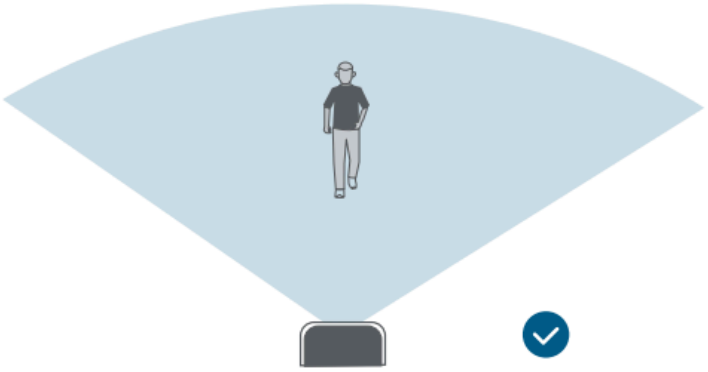

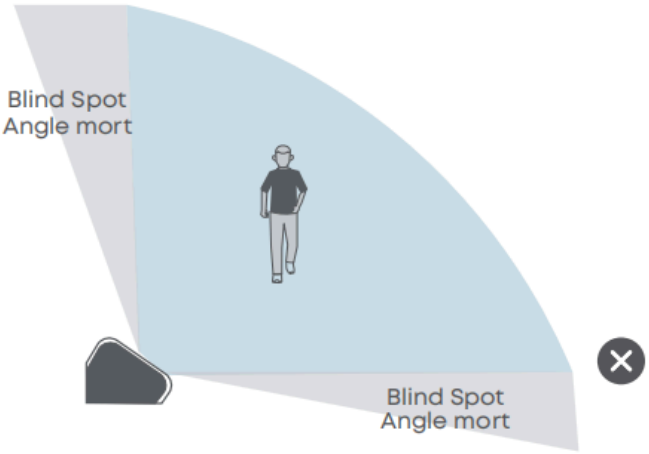

5. Adjust the Lens Angle & Check the Detection Range

Adjust the lens angle by aligning your desired angle marking (0°, 15°, 30°, or 45°) with the bottom edge.

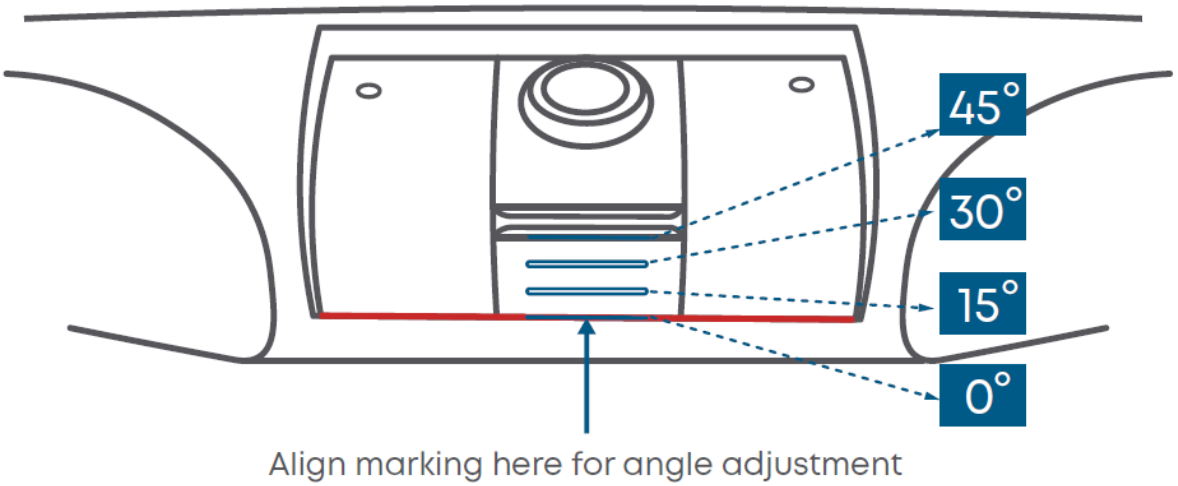

For distance detection: Use a smaller angle for distant detection (e.g., driveway gate).

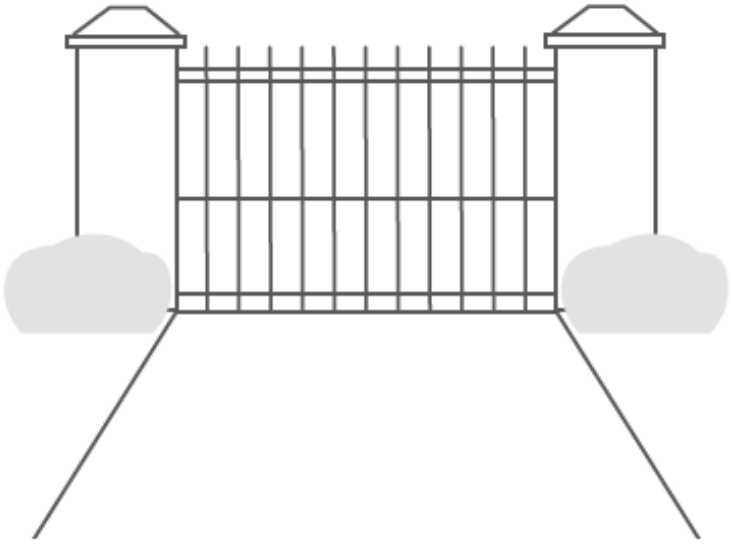

Adjust the lens angle to 0° for maximum detection range, as shown below.

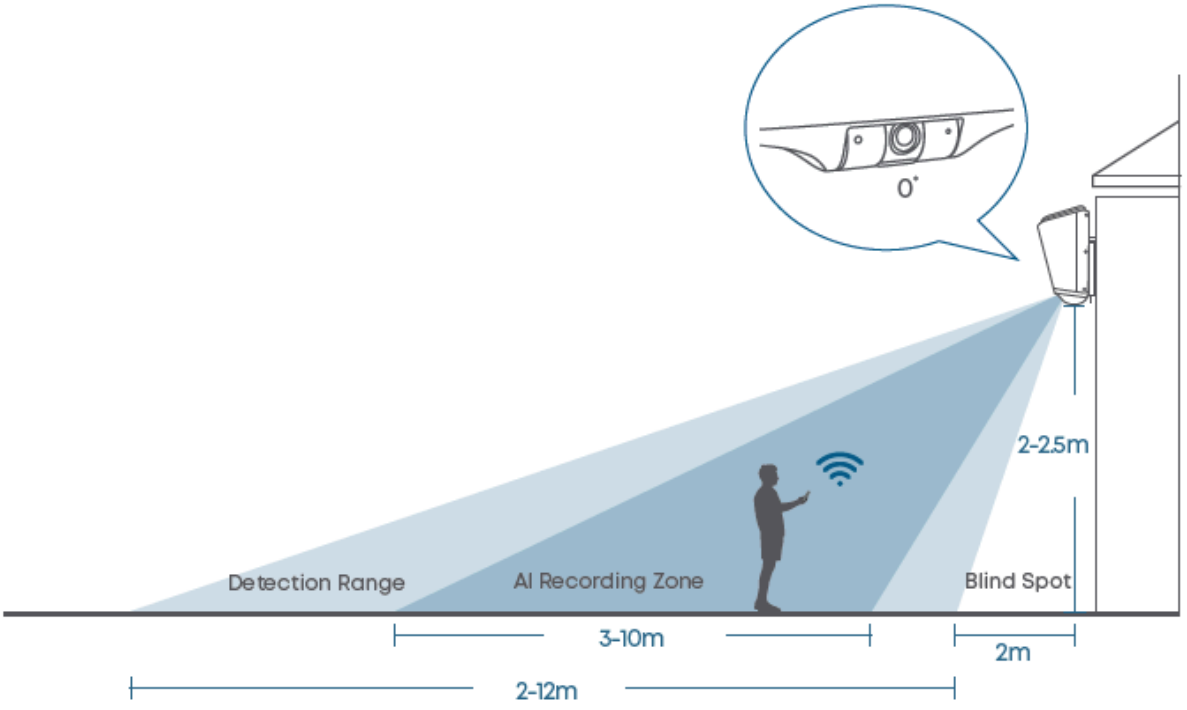

For nearby detection: Use a larger angle for nearby detection (e.g., front door area).



Adjust the lens angle to 45° for minimum detection range, as shown below.

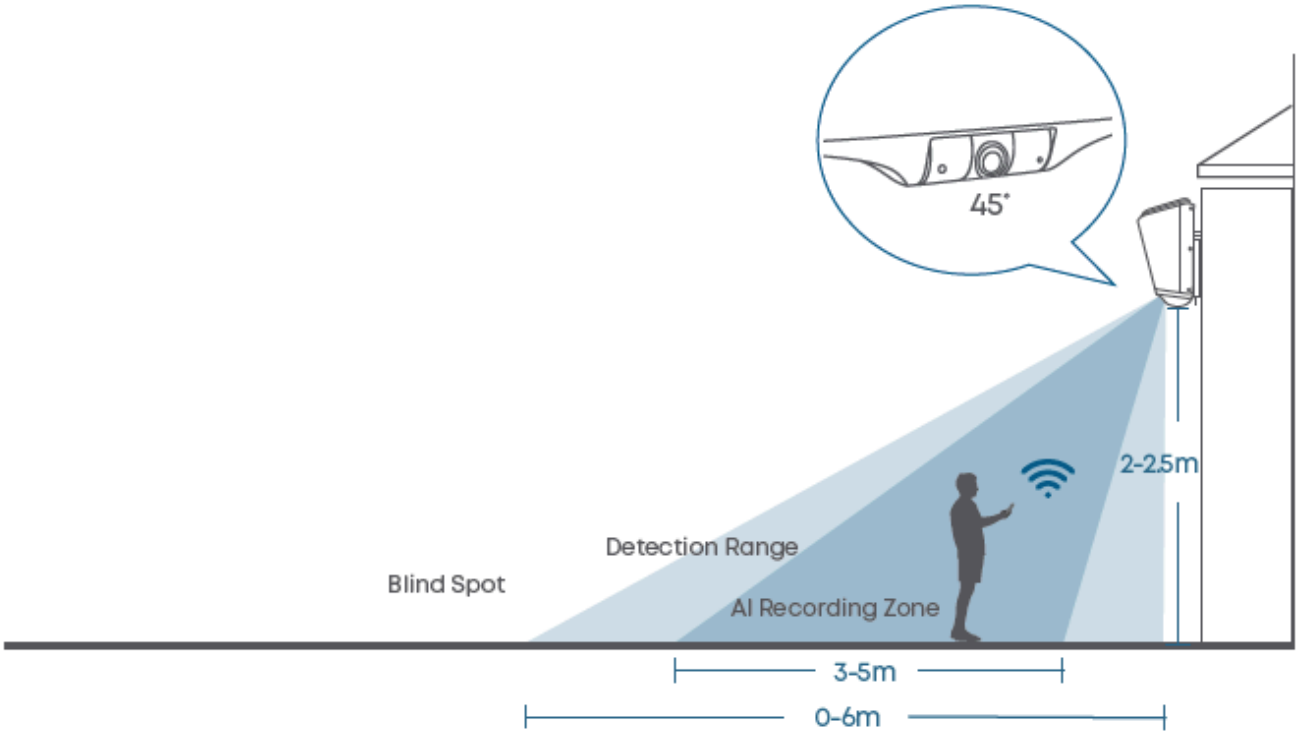

Note: The value ranges are based on internal lab tests.

6. Recheck in the App

Check before installation:

- Strong Wi-Fi signal
- Smooth live streaming

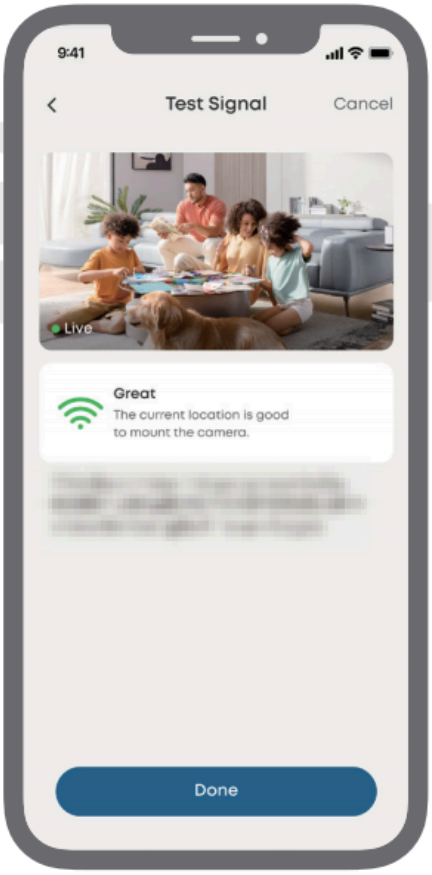

Mount the Solar Panel

Option 1 Integrated Mounting (Less Drilling)

The solar panel is pre-installed on top, so no additional steps are required. Go to “Mount the Wall Light Camera” chapter to continue with the camera installation.

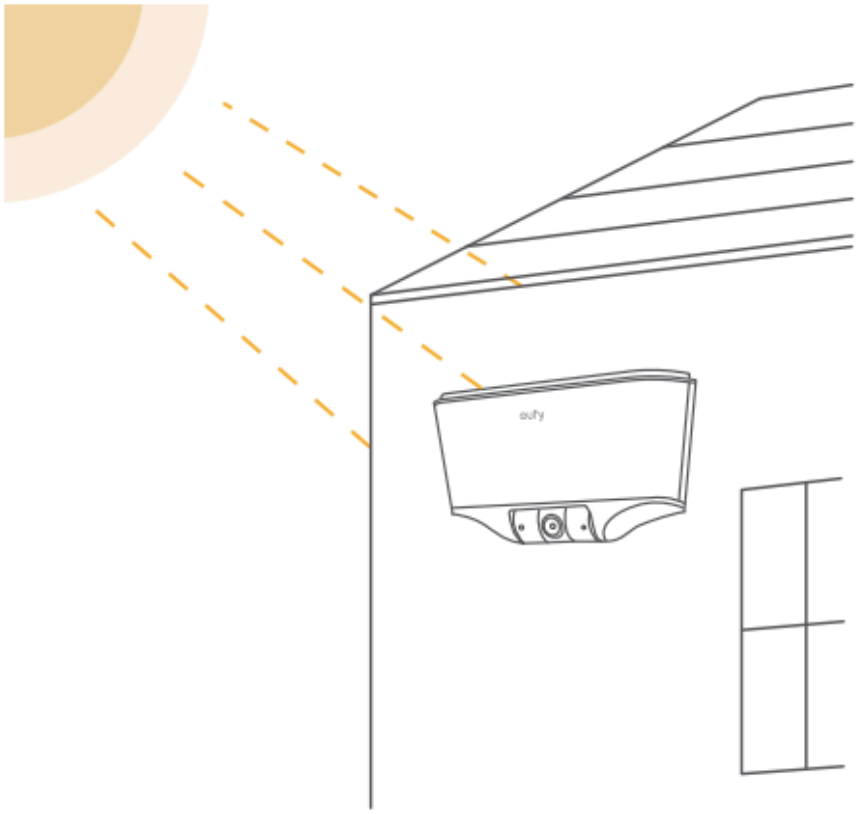

Option 2 Flexible Mounting (Best Sunlight)

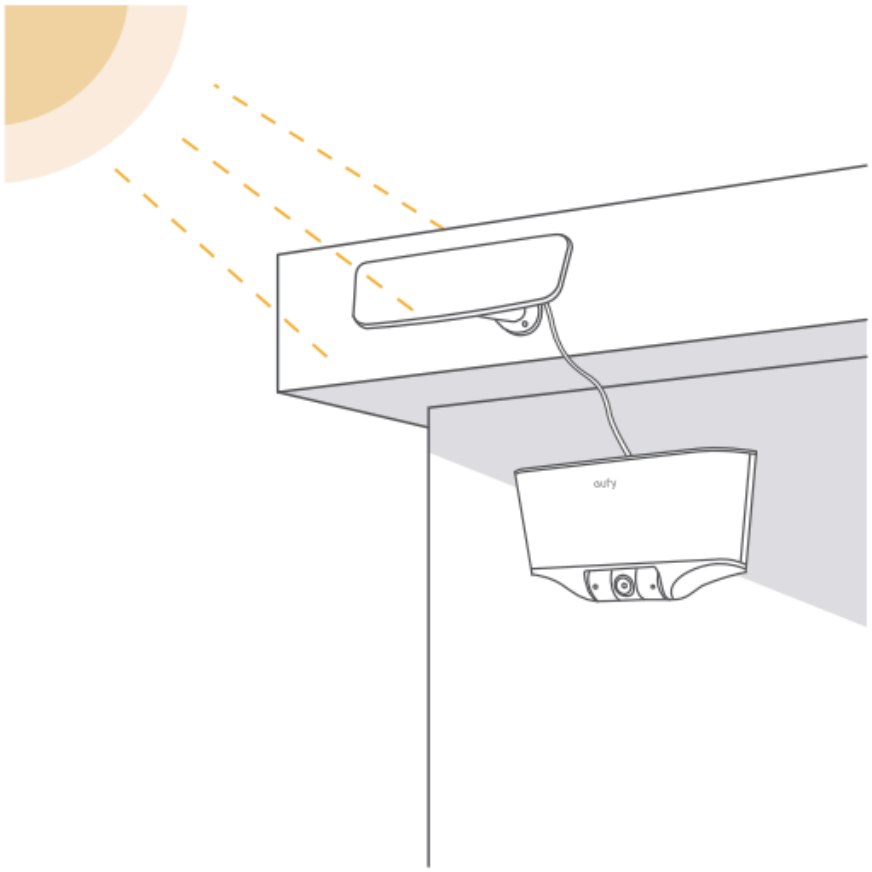

① Push to remove the solar panel

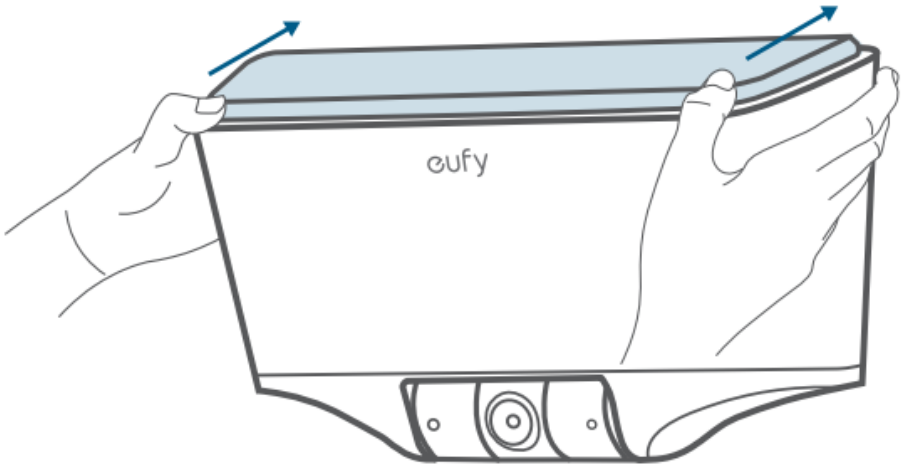

② Install the mounting bracket

③ Mount the solar panel

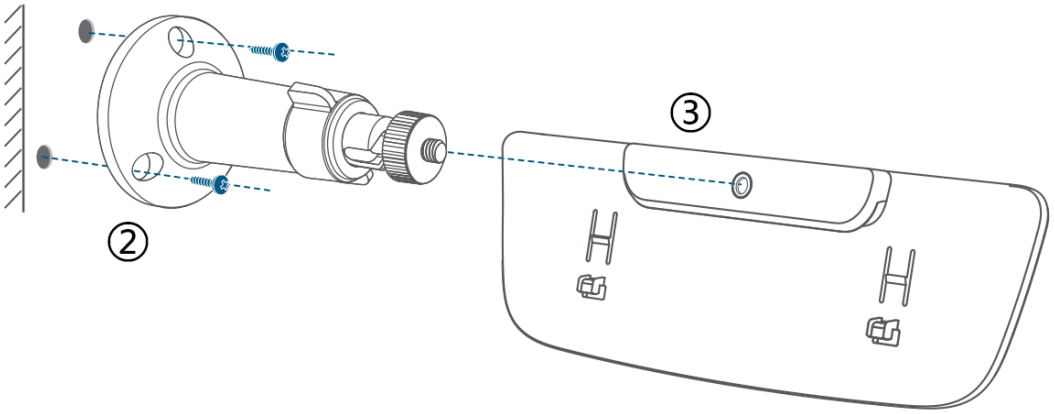

④ Connect the solar panel to the wall light camera

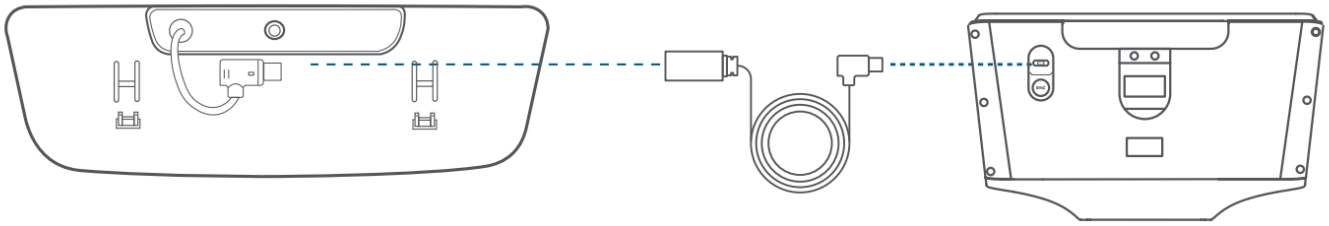

Mount the Wall Light Camera

Option 1 Bracket Mounting

1. Position & drill holes

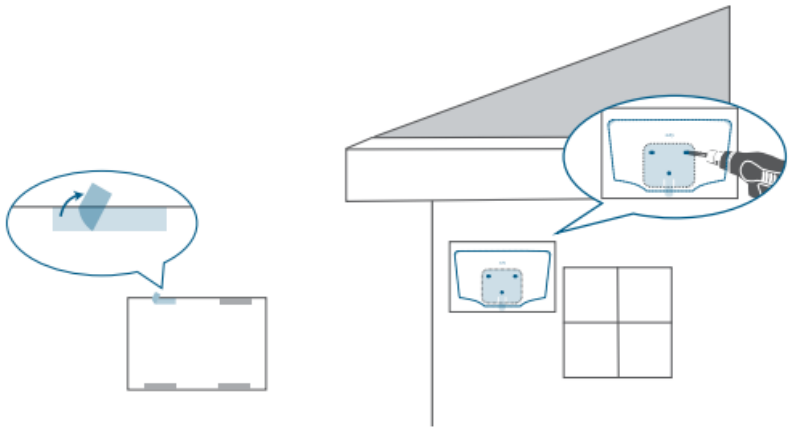

💡Use the positioning card for easier first-time installation.

2. Insert anchors

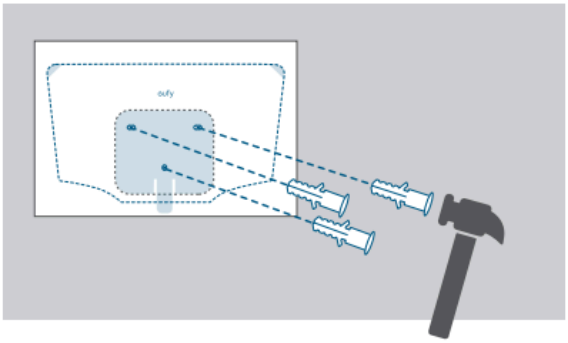

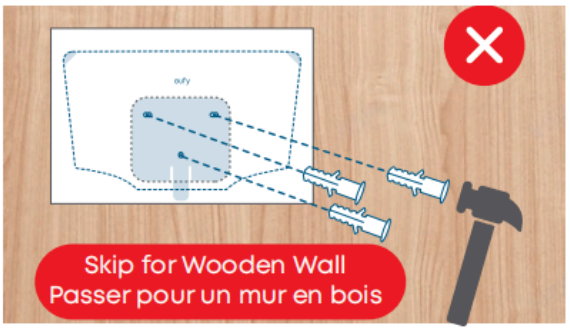

3. Secure the mounting bracket

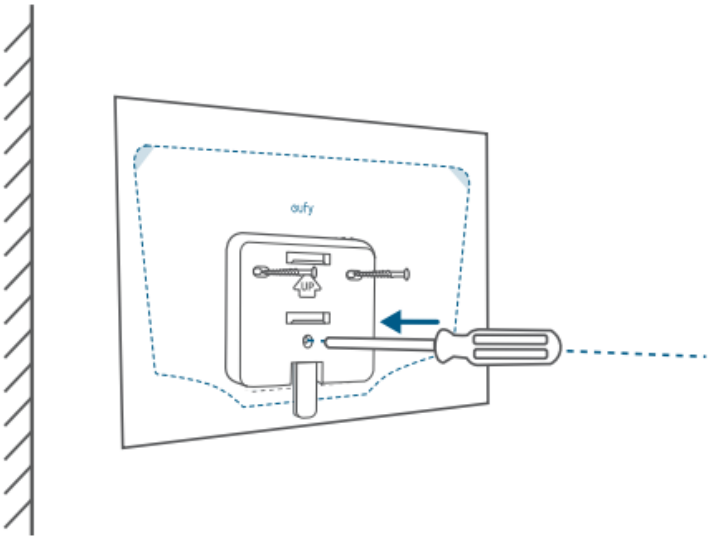

4. Align the corners with the blue area on the positioning card

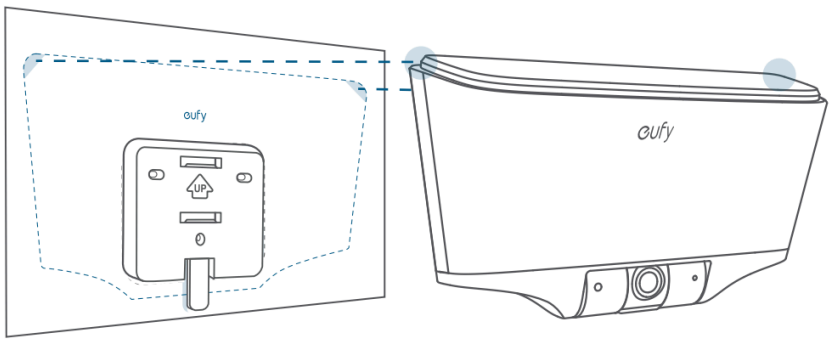

5. Attach the wall light camera to the mounting bracket, then slide it down to lock in place.

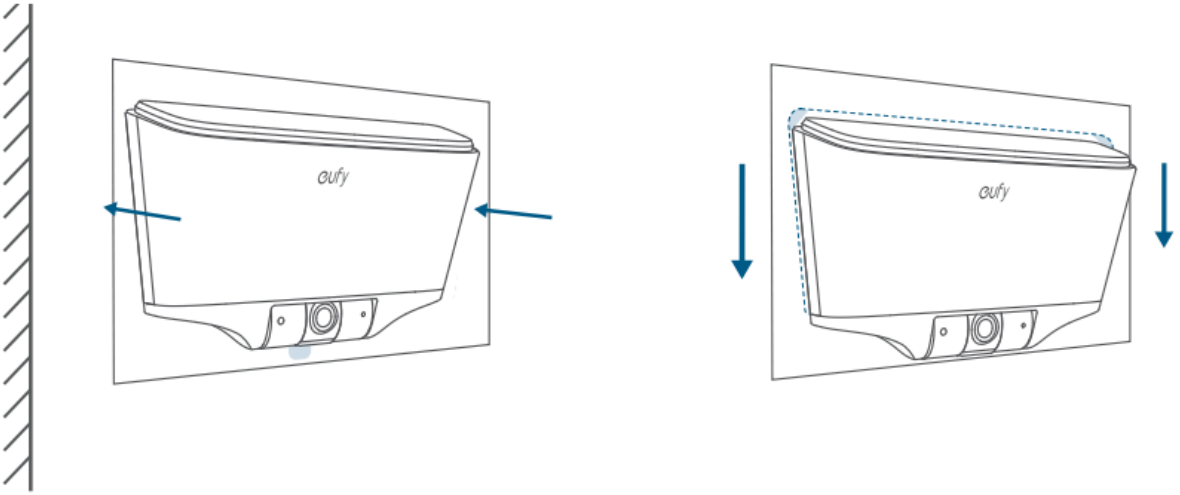

💡You can also align the bottom of the camera lens with the bracket tab (tab slightly protruding), then slide down until you hear a click.

6. Remove the positioning card.

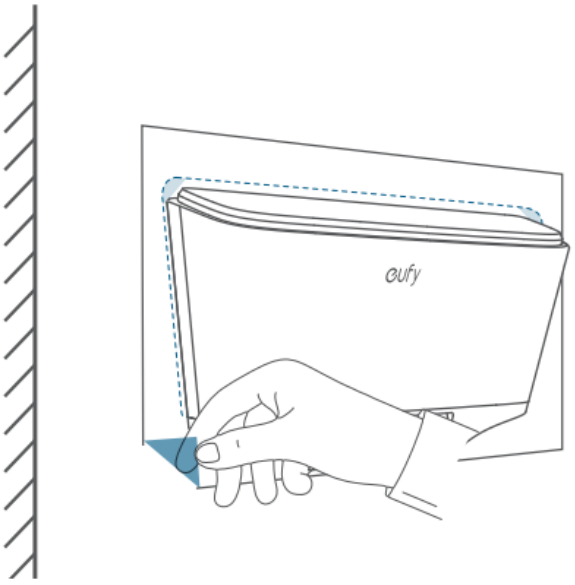

*To remove the wall light camera, press and hold the bracket tab while lifting the wall light camera up.

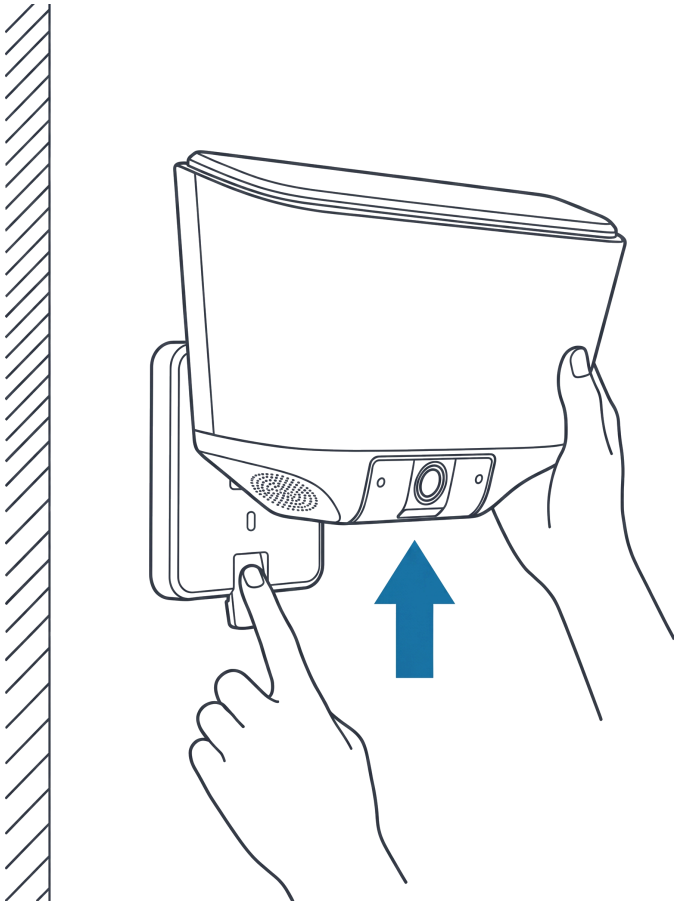

Option 2 Hook Mounting

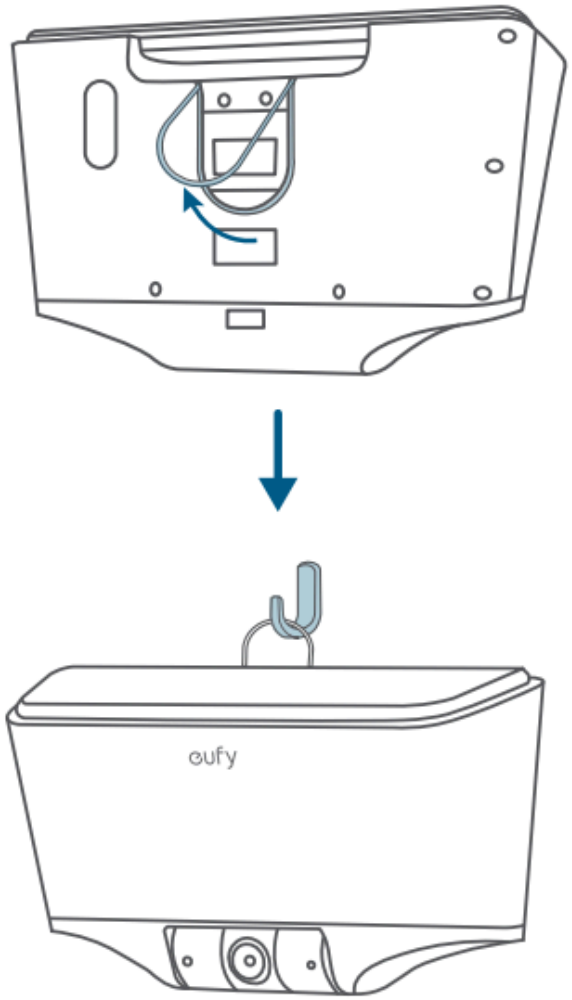

After Mounting

Adjust the Camera Field of View

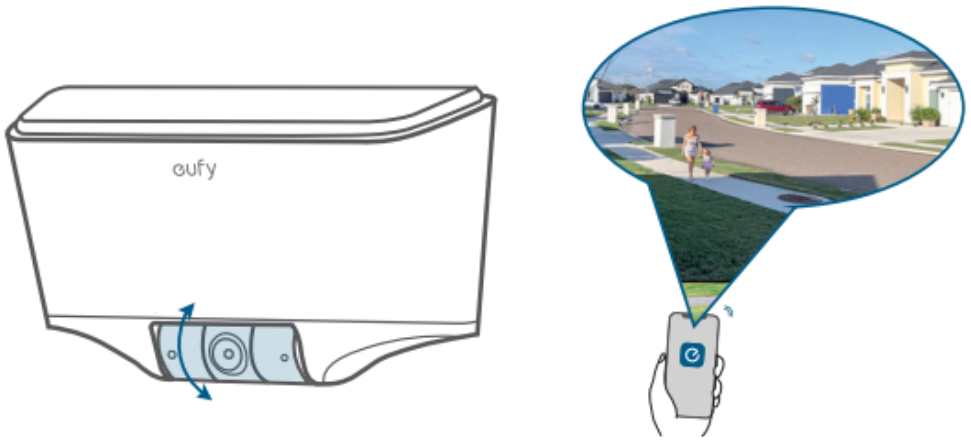

Find Out More

Congratulations! Now you're all set to use your eufy Wall Light Cam S4! Please explore more in the eufy app.



Other Information

Default Open Port 1: Wi-Fi (2.4 GHz)

Port Description:

After initial power-on or reset, if no Wi-Fi credentials are configured, the device may enter network provisioning mode (e.g., AP or BLE pairing mode).

In normal operating mode, the device automatically connects to the saved router SSID and password.

To change the Wi-Fi configuration, use the app or reset the network settings as described in the manual.

Default Open Port 2: BLE (Bluetooth Low Energy)

Port Description:

Upon power-on, if the device is not yet connected to a network, it automatically enables BLE broadcasting and provides a Bluetooth-based network provisioning (or control) service. Once network configuration is complete, BLE broadcasting is automatically disabled.