1. About This Guide

1.1 Purpose and Scope

1.2 Related Guide

1.3 Model Reference

2. Unboxing

2.1 Check Before Installation

2.2 In the Power Module Box

2.3 In the Battery Module Box

2.4 Optional Accessories

3. Product Overview

3.1 At a Glance

3.2 Button Controls

3.3 LED Guide

4. Pre-Installation

4.1 Site Selection

4.2 Measurement

4.3 Tools

5. Installation

Precautions

Method 1: Mount on Floor

Method 2: Mount on Metal Pad

Method 3: Mount on Wall Bracket

Method 4: Mount on Trolley

6. Device Setup

6.1 Power On / Off

6.2 Use the Anker App

7. Charge Your E10

7.1 Use the Cable Plug

7.2 Recharge From a Wall Outlet

7.3 Recharge From Solar Panels

Direct Connection
Series Connection
7.4 Recharge From Anker SOLIX Smart Generator 5500
7.5 Recharge From Third-Party Generator
8. Power Your Devices
8.1 Power Home Devices (Normal Use)
8.2 Power Transfer Switch (In a Grid Outage)
9. Specifications
9.1 Anker SOLIX E10 Power Module
9.2 Anker SOLIX B6000 Battery Module
10. Safety Information
10.1 Safety Symbols
10.2 Environmental Safety
10.3 Operational Safety
10.4 Battery Safety
10.5 Transportation Safety
10.6 Storage Requirements
11. Appendices
Appendix 1. Overload Capacity
Appendix 2. LRA Compatibility

1. About This Guide

1.1 Purpose and Scope

This guide provides step-by-step instructions for learning, installing, and operating your Anker SOLIX E10 as a standalone energy storage system.

1.2 Related Guide

Refer to the following sections of the E10 System and App Guide for related application scenarios.

Application Scenario	Section
Use with Anker SOLIX Smart Generator 5500 (Tri-Fuel)	Range-Extended Backup System (A17E1, A7320)
Use with Anker SOLIX Smart Inlet Box	Manual Backup System (A17E1, AS211)
Use with Anker SOLIX Power Dock	Automatic Backup System (A17E1, AX170)
Use with Anker App	Anker App for Smart Control

1.3 Model Reference

Model	Product Name	Shortened Form
A17E1	Anker SOLIX E10 Power Module	Power Module
A17E1141-85	Anker SOLIX B6000 Battery Module	Battery Module
A17E1, A17E1141-85	Anker SOLIX E10	E10

2. Unboxing

2.1 Check Before Installation

Inspect the Outer Packaging

Before unpacking, inspect the outer packaging for holes, cracks, or other damage, and verify the equipment model number.

If any damage is found or the model does not match your order, do not unpack the equipment. Contact customer support immediately.

Verify Contents

After unpacking, check that all items are intact and complete, and free from any obvious damage. If any item is missing or damaged, please contact customer support.

2.2 In the Power Module Box

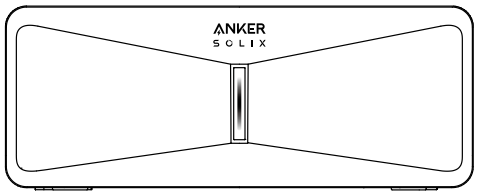

Anker SOLIX E10 Power Module

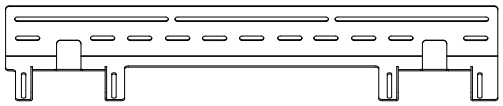

Fixed Bracket

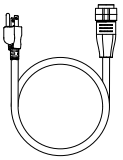

120V AC Charging Cable

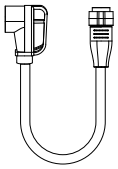

240V Output Cable



Screw (M5 18 mm) ×6

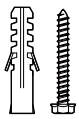

Expansion Screw
(M6 50 mm) ×2



Wrench for Removing
PV Connectors



Documents

2.3 In the Battery Module Box



Anker SOLIX B6000 Battery Module



Screw (M5 18 mm) ×2



Document

2.4 Optional Accessories

The following accessories can be ordered separately.

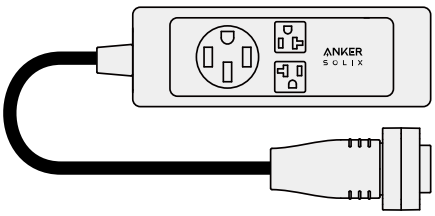	**Anker SOLIX E10 120V/240V Power Strip** Connects the power module to home devices.
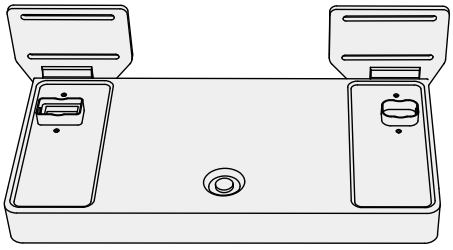	**Anker SOLIX E10 Wall Bracket** Enables wall mounting in areas prone to flooding or where floor mounting is not possible, such as lawns.
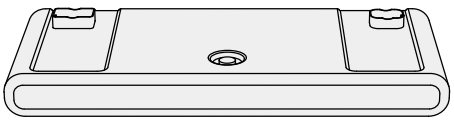	**Anker SOLIX E10 Metal Pad** Raises the modules and provides stable support on uneven hard surfaces.

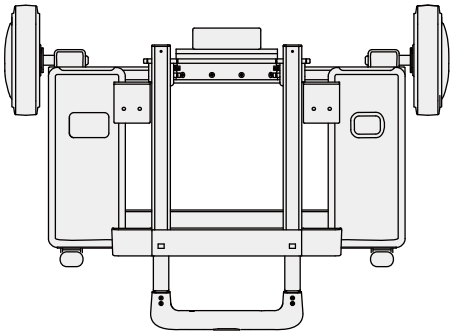	**Anker SOLIX E10 Trolley** Facilitates easy transportation of modules.
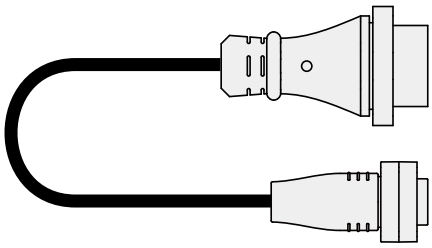	**Anker SOLIX E10 AC Generator Adapter** Connects the power module to a third-party generator for extended power supply.

3. Product Overview

3.1 At a Glance

Anker SOLIX E10 Power Module

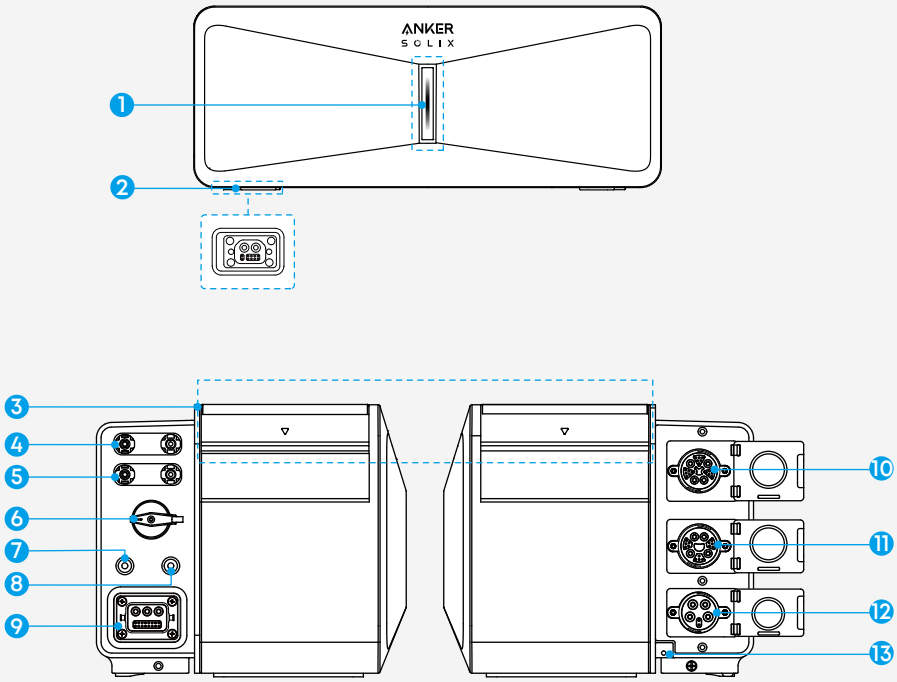

1 Light Bar
2 Battery Port
3 Handle
4 PV Connector Ports for PV Input 1

5 PV Connector Ports for PV Input 2
6 PV Switch
7 IoT Button
8 Power Button
9 DC Input Port
10 AC Input / Output Port
11 AC Output Port
12 AC Input Port
13 Ground Terminal

Anker SOLIX B6000 Battery Module

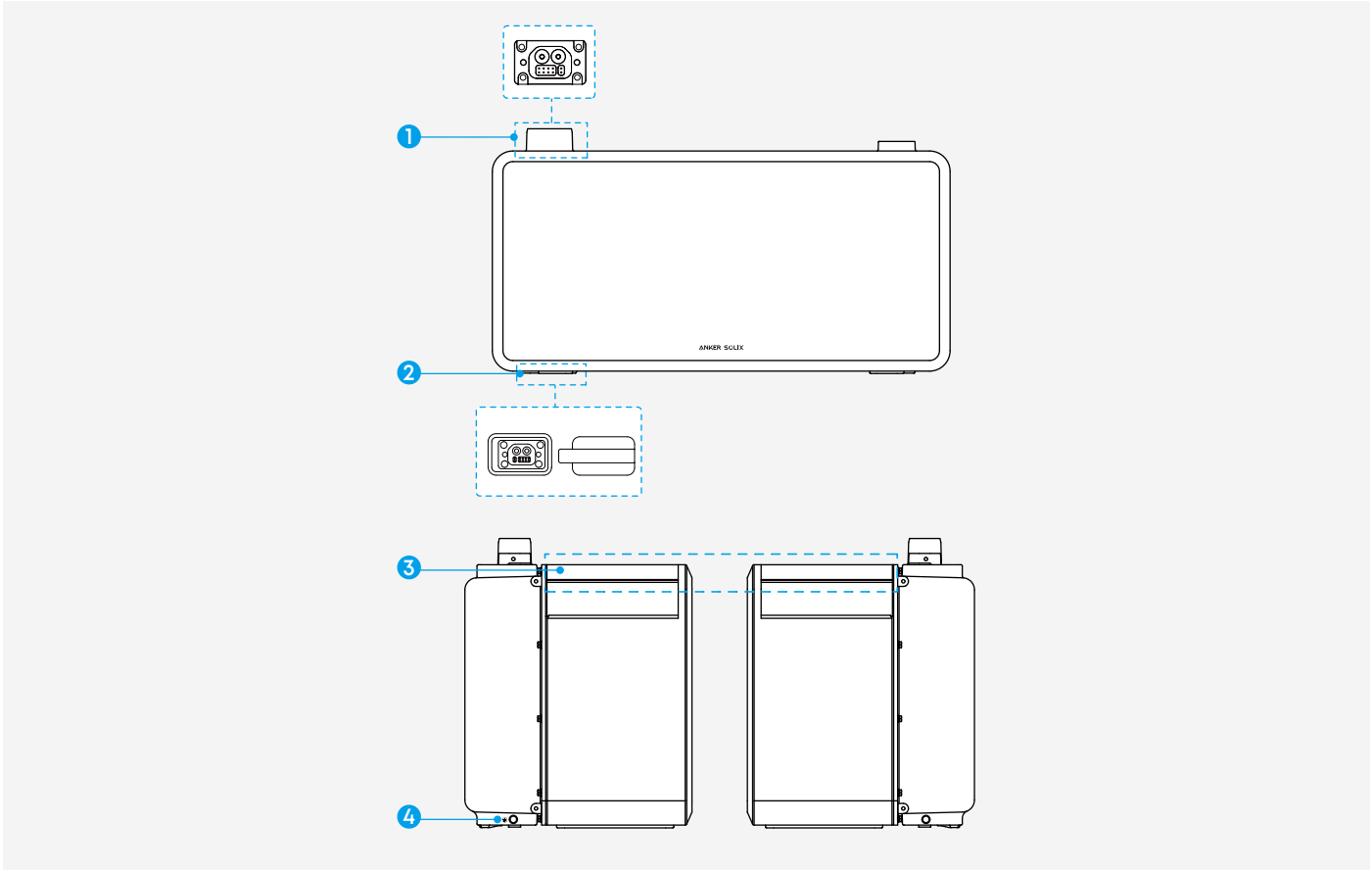

1 Battery Port
2 Battery Port with Rubber Plug
3 Handle
4 Ground Terminal

3.2 Button Controls

Button	Action	Function
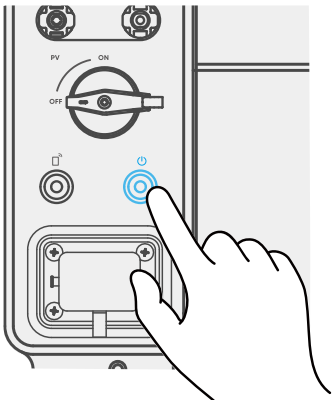	Press for 3 seconds.	Power on / off. *This function applies to the E10 system without the inlet box or power dock.
	Press once.	Turn AC output on / off.
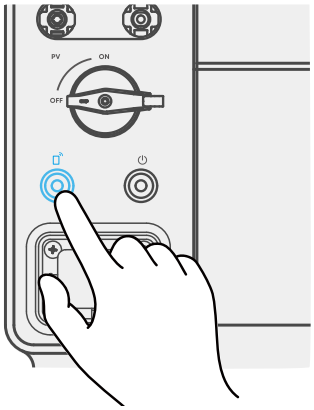	Press for 2 seconds.	Enable network connection.
	Press for 2 seconds.	Disable network connection.
	Press once.	Confirm Bluetooth connection.
	Press for 7 seconds	Reset Bluetooth and Wi-Fi.

3.3 LED Guide

LED	Status
	**Powered On** Blue LED illuminates toward the center and cycles three times.
	**Powered Off** Blue LED fades toward the center.
	**AC Output On** The LED turns solid blue and the length indicates the battery level. For details, refer to the table below.
	**AC Output Off** The LED turns solid white and the length indicates the battery level. For details, refer to the table below.



Recharging

Blue LED flows upward.

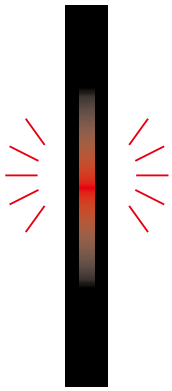

Malfunction

Red LED flashes.

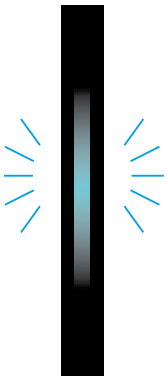

Connecting to the Network

Blue LED flashes.



Connected to the Network

Blue LED stays solid for 1 second and changes to current status.



Firmware Updating or Self-Testing

Blue LED flows downward.

Battery Level (Example: White Light)

0-20%



20-40%



40-50%



50-60%



60-80%



80-90%



90-100%



4. Pre-Installation

Before installation, verify that the site, space, and tools meet the requirements for safe and efficient setup.

4.1 Site Selection

⚠ Read all safety instructions in Section 10 · Safety Information.

Floor Mounting

· Ensure the installation site has solid, stable ground that is not soft, spongy, or prone to settling.

· Select a location above the highest recorded water level and away from low-lying areas where water or snow may accumulate.

· In areas with dense vegetation, remove weeds regularly and reinforce the ground beneath the modules with cement or gravel.

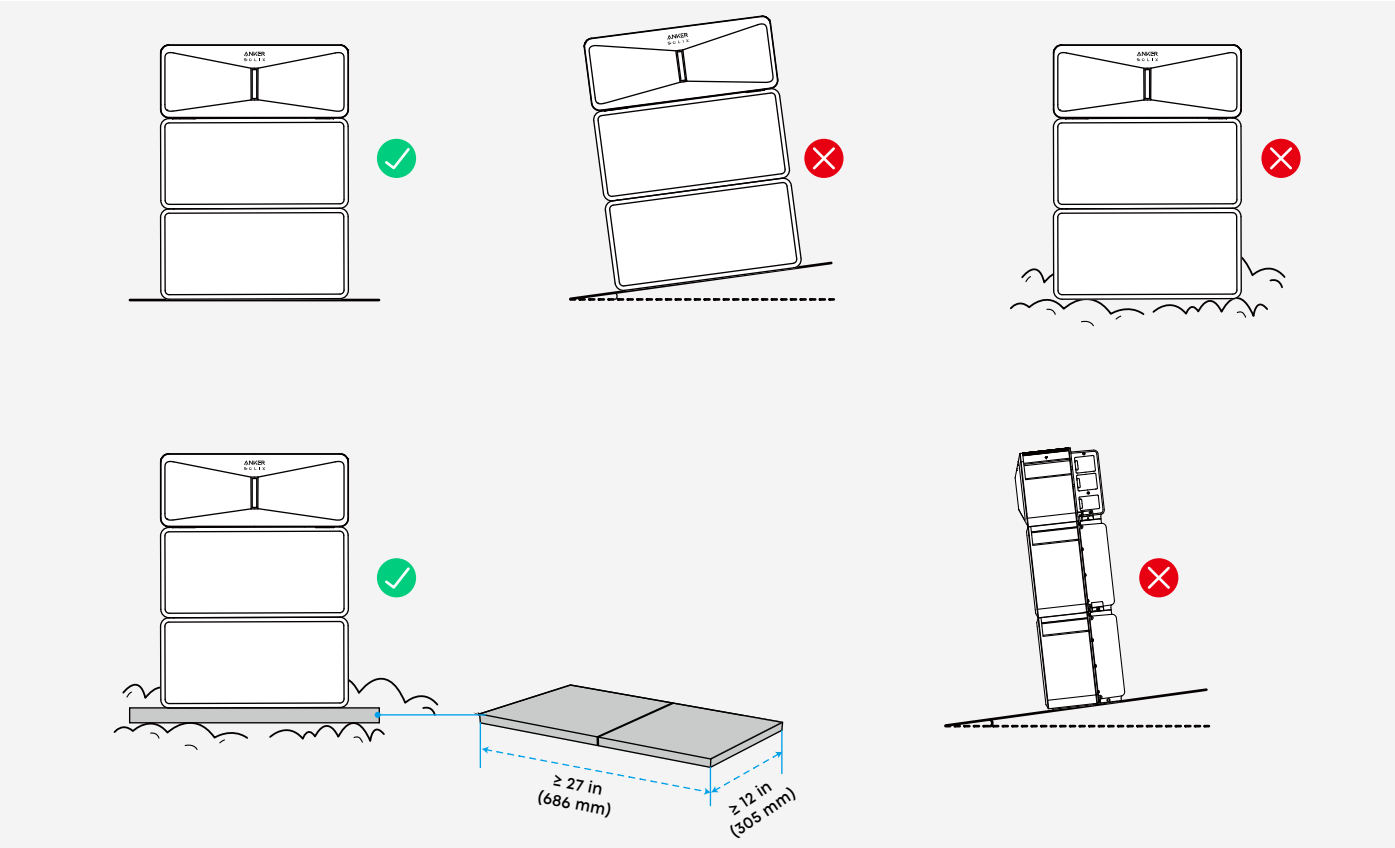

Wall Mounting

Ensure the wall can support the total weight of all installed modules.

· Power module: 60.6 lbs (27.5 kg)

· Battery module: 130 lbs (59 kg)

Wi-Fi Reception

Confirm that the installation area has a good wireless signal.

If a mobile device can connect to the local 2.4 GHz Wi-Fi at the site, the power module will also connect reliably.

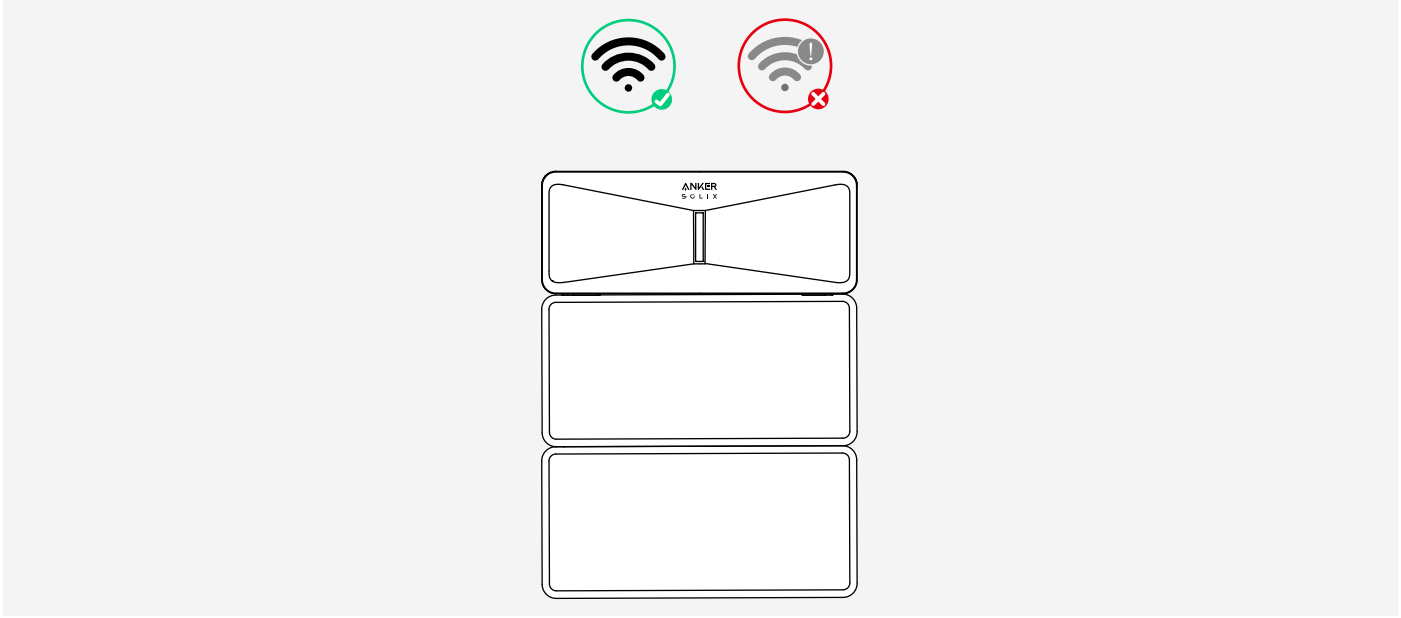

4.2 Measurement

Equipment Dimensions

Power Module

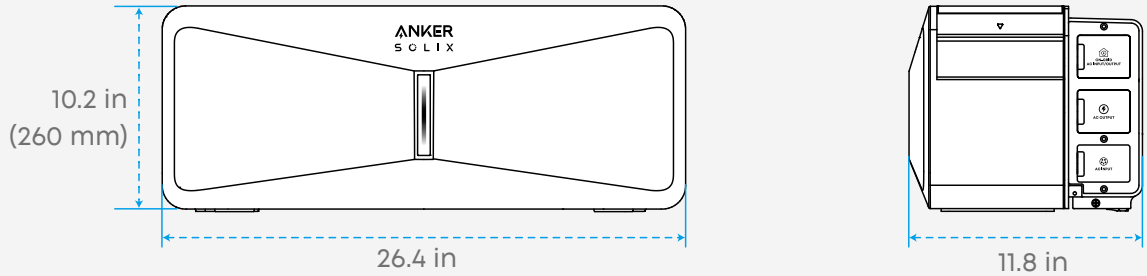

Battery Module

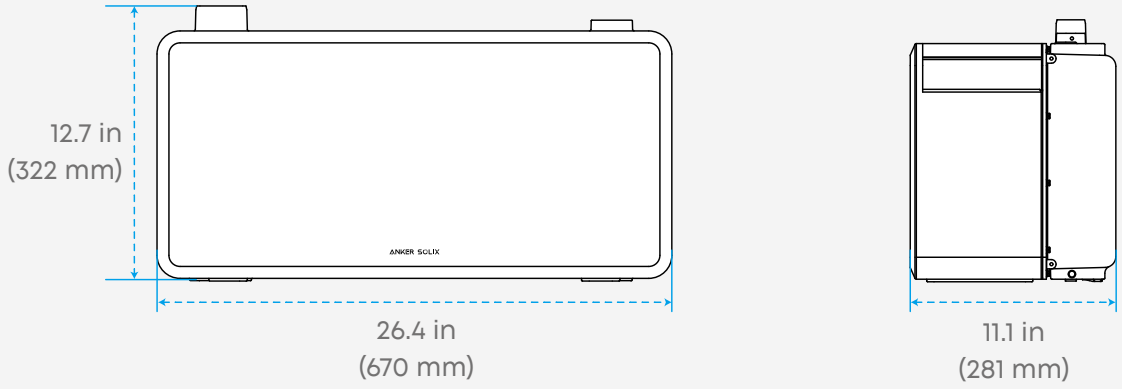

Stacking Configurations

E10 can be installed using different mounting methods

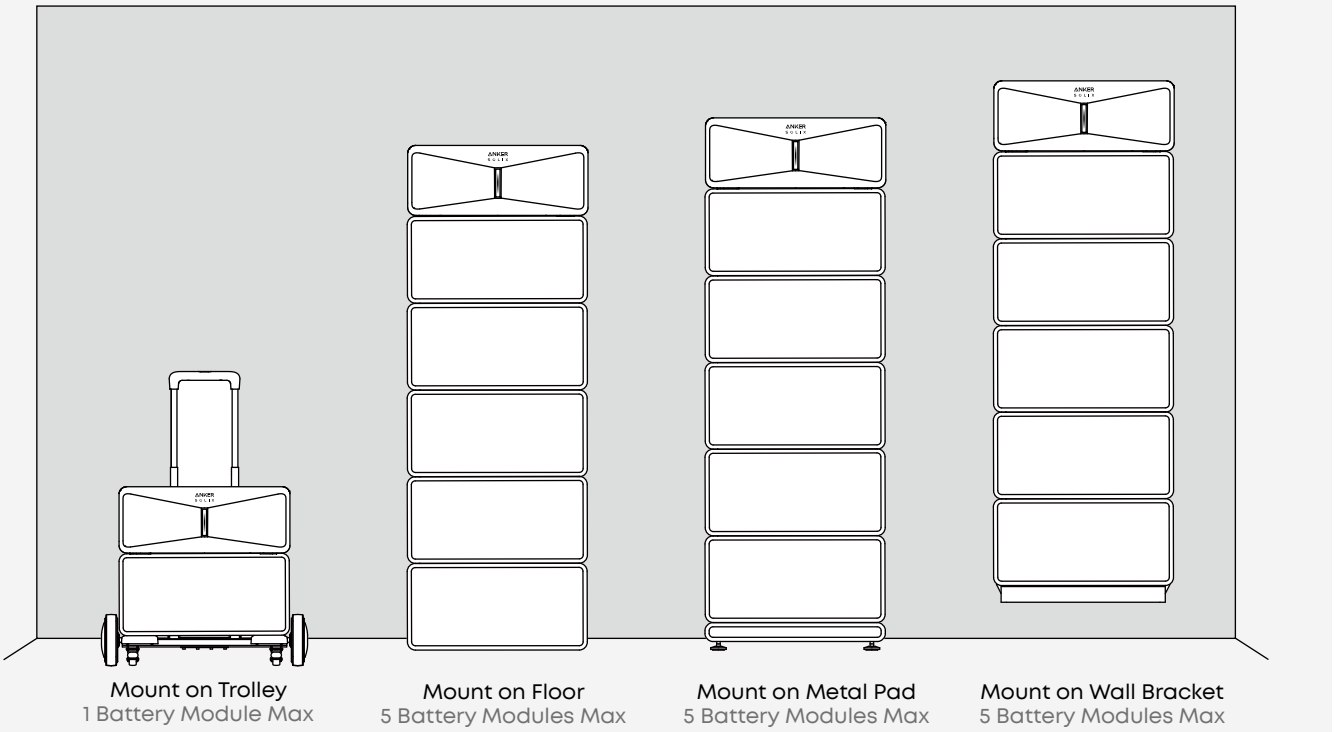

The following diagrams show system dimensions for stacks of 1 to 5 battery modules. Keep at least 11.8 in (30 cm) clearance from the ceiling for heat dissipation.

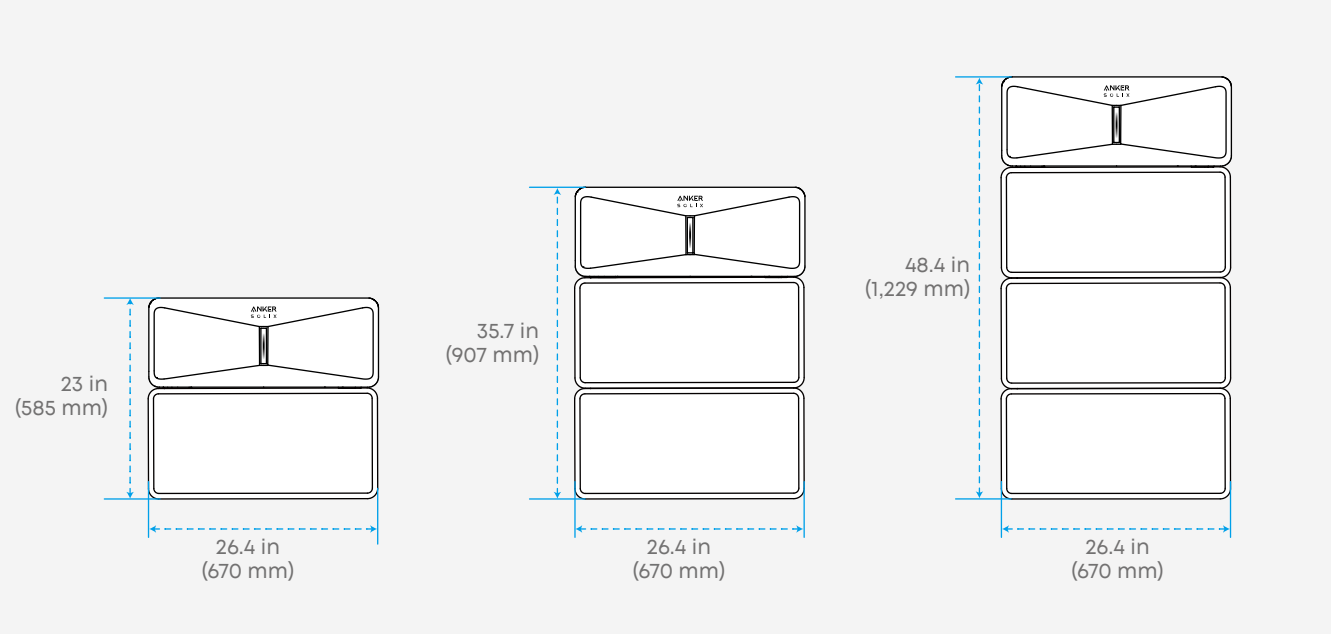

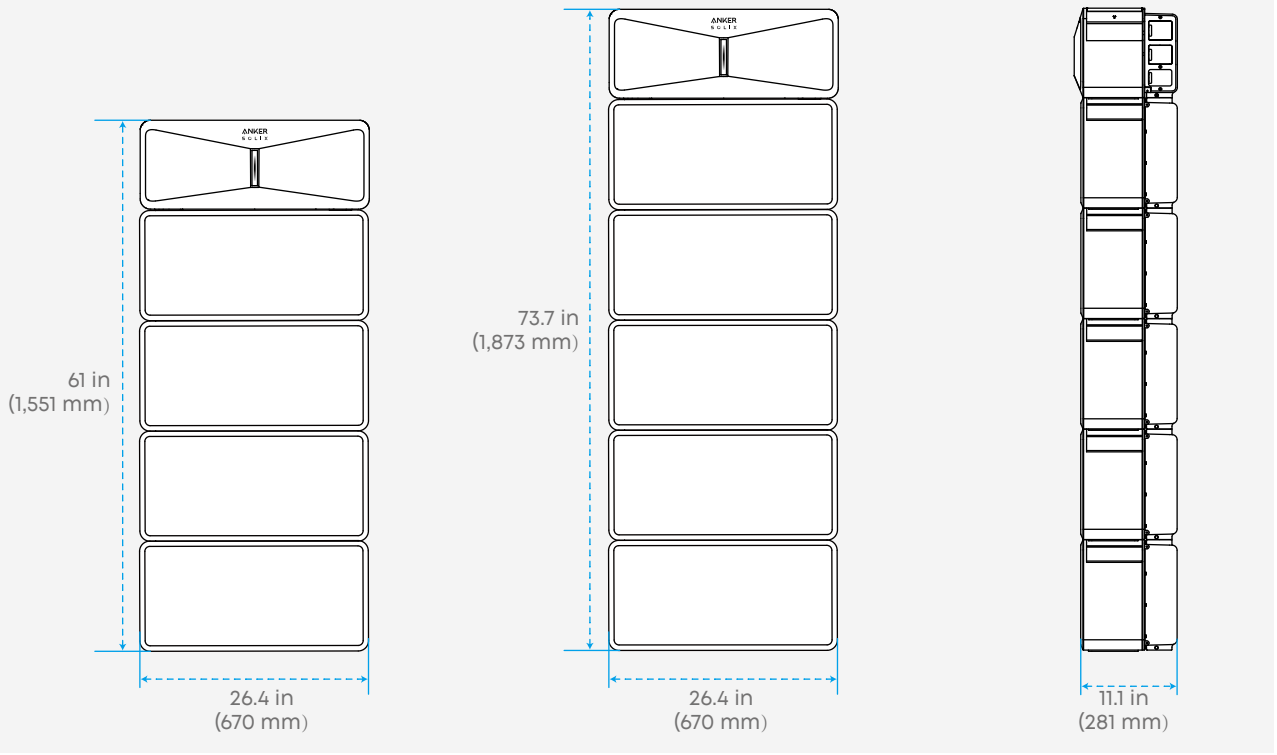

4.3 Tools

Prepare the following tools before installation. They are not included in the package.

Required Tools (for All Mounting Methods)

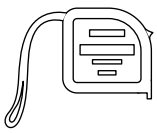

Measure Tape

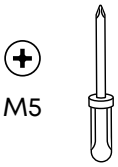

Screwdriver

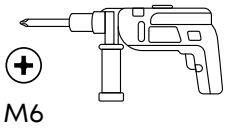

Power Drill

Additional Tools (for Wall Mounting Only)

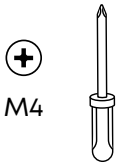

Screwdriver

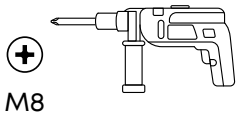

Power Drill

5. Installation

This section provides instructions for installing E10 in four different mounting methods.

Precautions

- Read all safety instructions in section “10. Safety Information”.
- Ensure the power module is turned off before installation.
- When moving modules manually, wear protective gloves to prevent injury.
- Follow local building codes for proper use of fasteners. Use self-tapping screws for wooden walls. Use expansion bolts for concrete or masonry walls.
- The lifting height increases when you install four or more battery modules. For safety, place the module on a stable platform first, then lift it into position.
- To remove a module from the stack, lift it horizontally and evenly to avoid shifting or misaligning the other modules.
- When locking the modules, tighten the screws slowly until the washers are seated flat. Improper tightening may damage the threads and strip the screws.

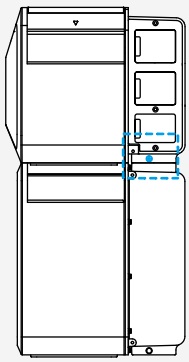



Method 1: Mount on Floor

This method supports installation of one power module and up to five battery modules. The following steps describe how to install one power module and two battery modules as an example.

Step 1. Place the Bottom Battery Module

Position the bottom module on a flat, hard surface within Wi-Fi coverage.

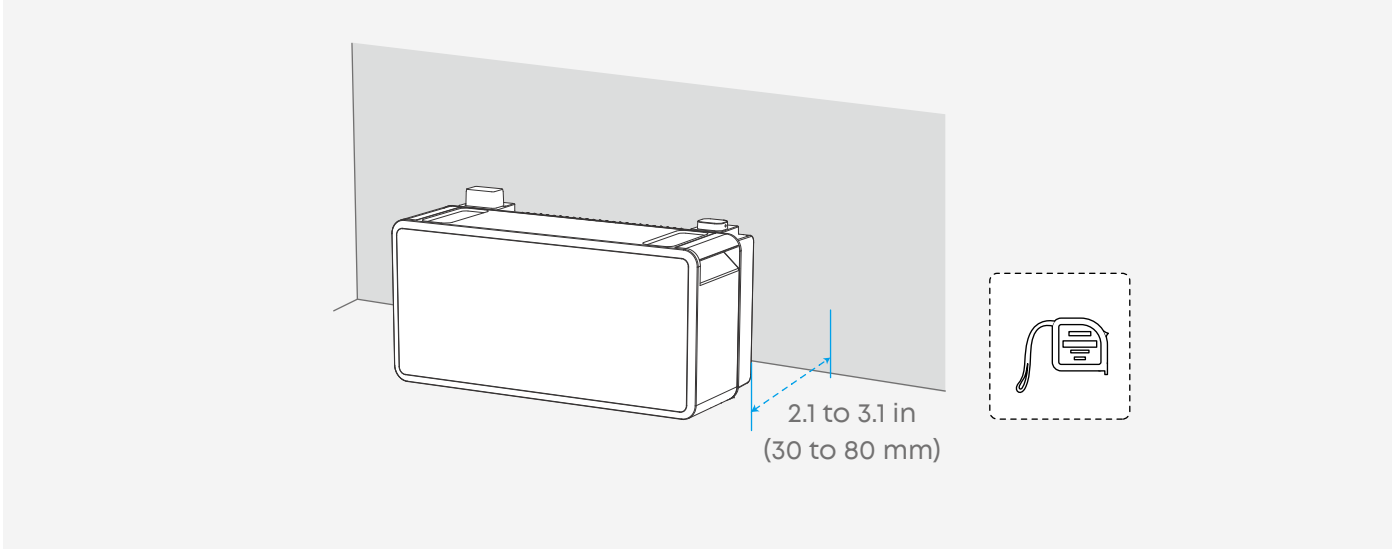

Step 2. Stack the Battery Module

Remove the rubber plug from the battery port before stacking.

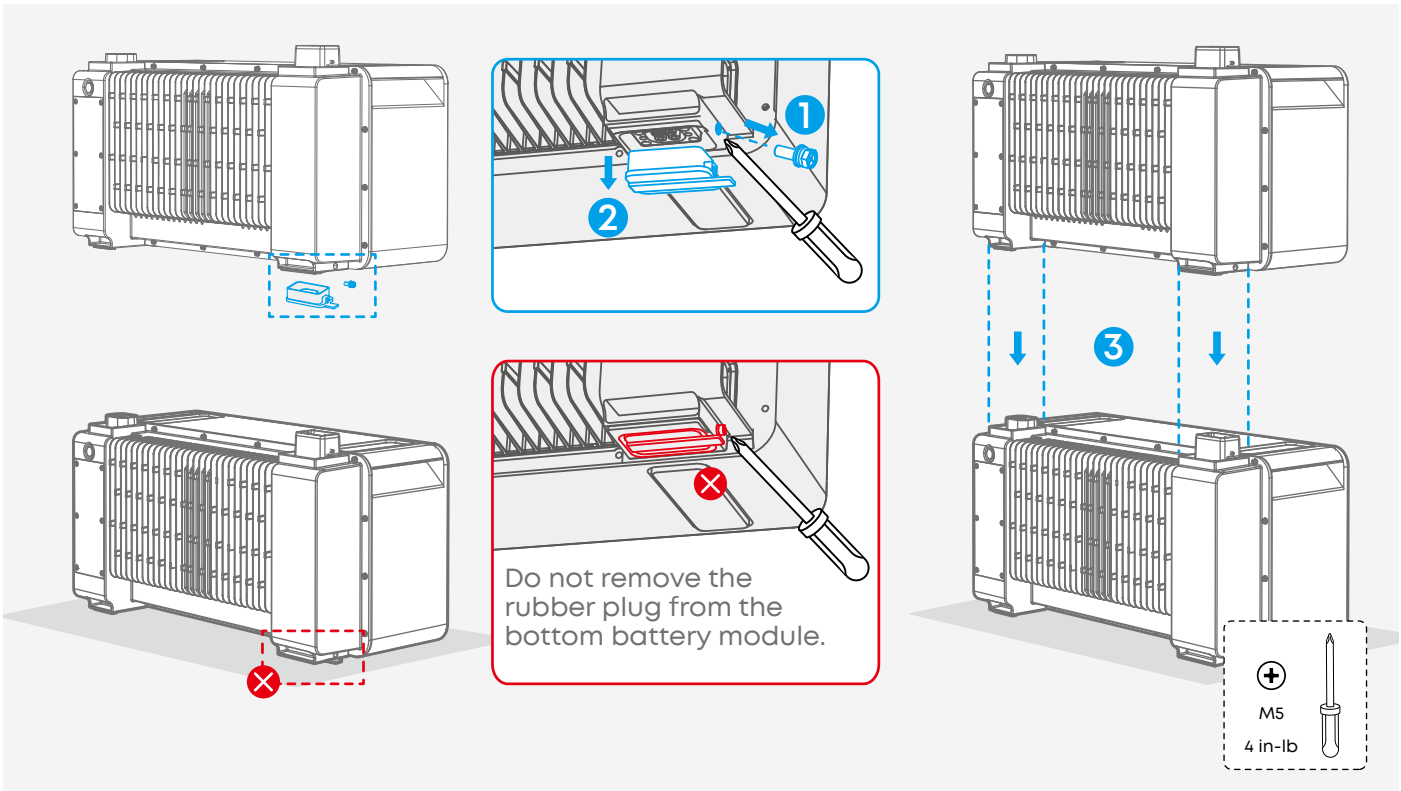

Step 3. Install the Fixed Bracket to Wall Studs

Number of Battery Modules	Fixed Bracket
1	No bracket is required.
2 to 3	Install one bracket on the top battery module.
4 to 5	Install one bracket on the top battery module. It is recommended to install another bracket on the third battery module.

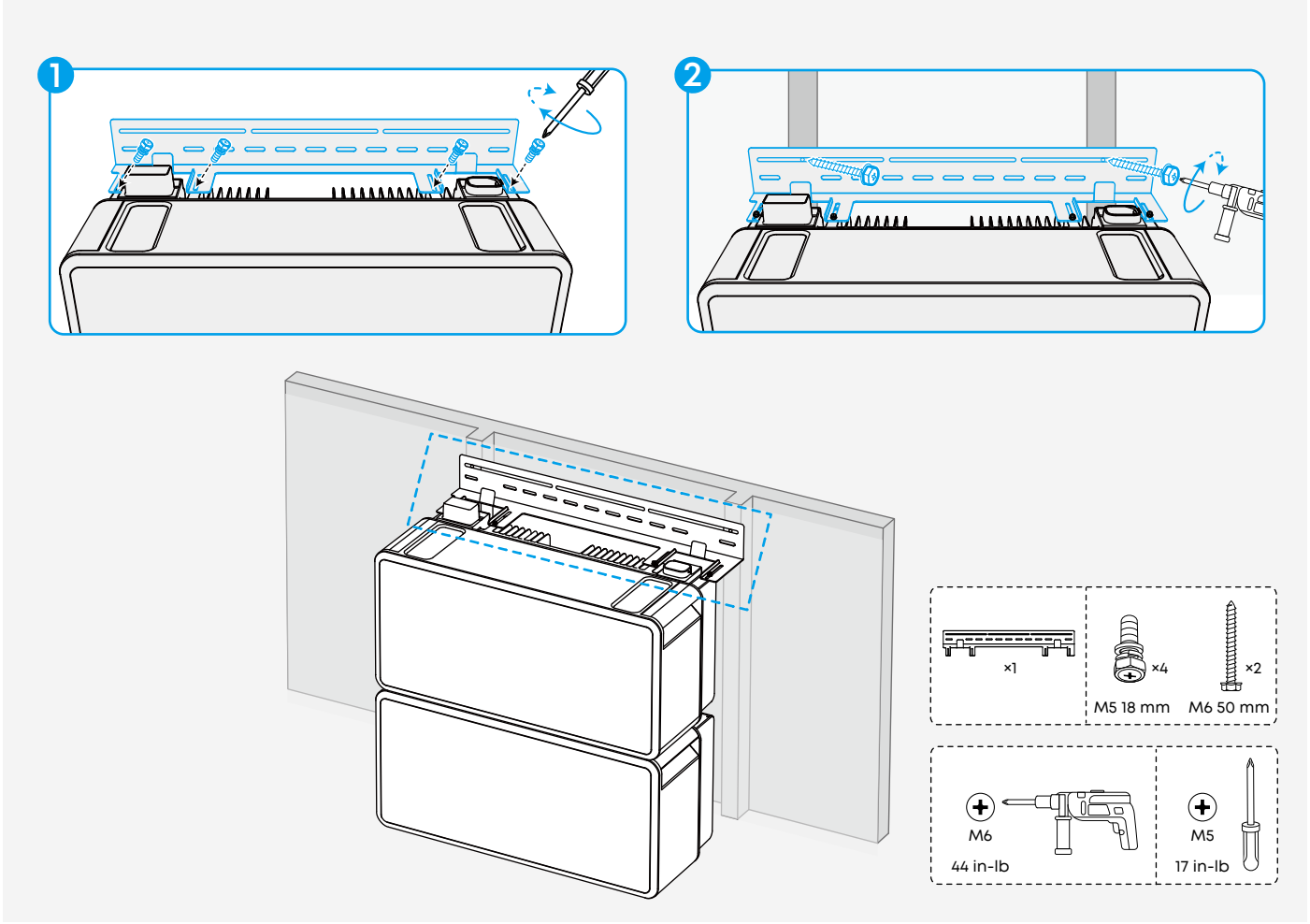

Step 4. Mount the Power Module

Mount the power module on top by aligning the corresponding ports.

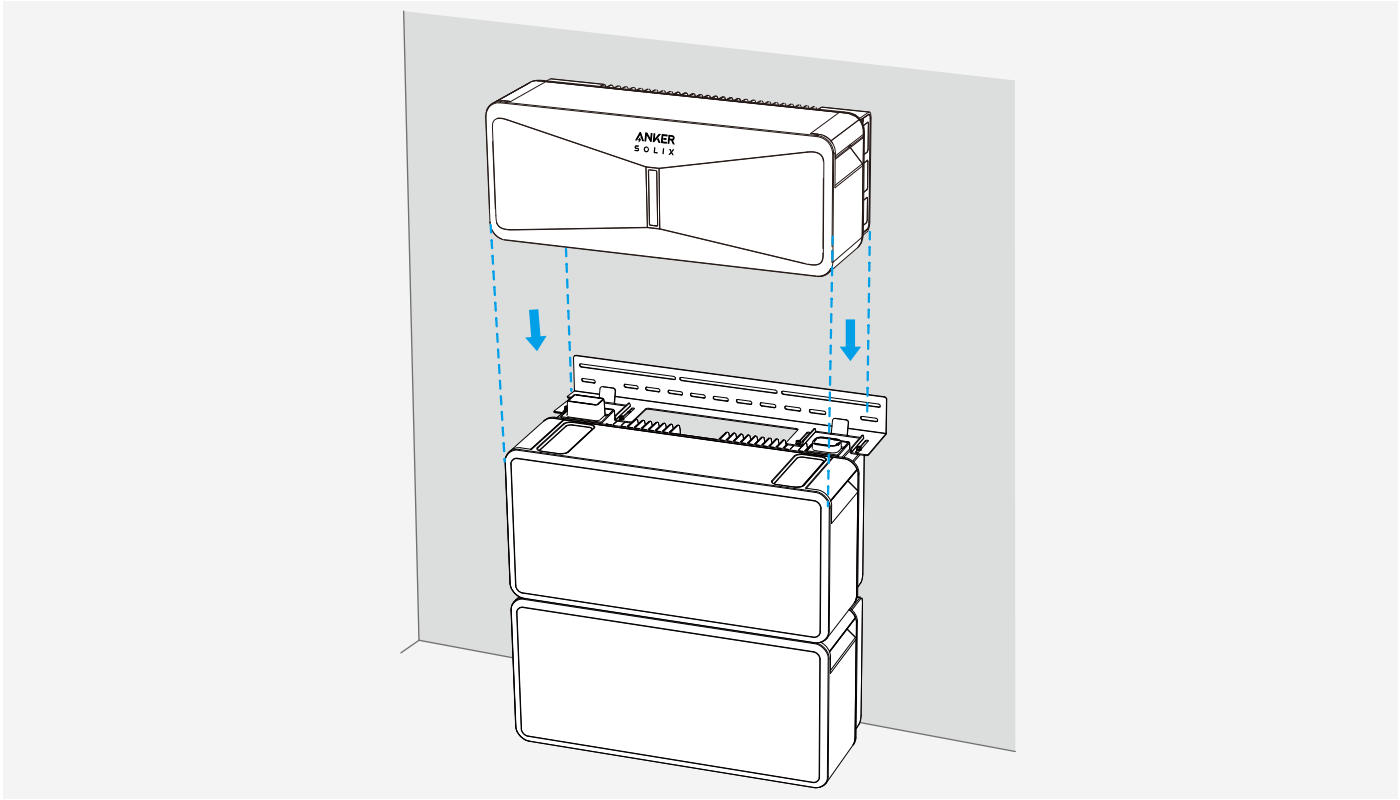

Step 5. Lock Modules

Tighten the screws on both sides of the modules.

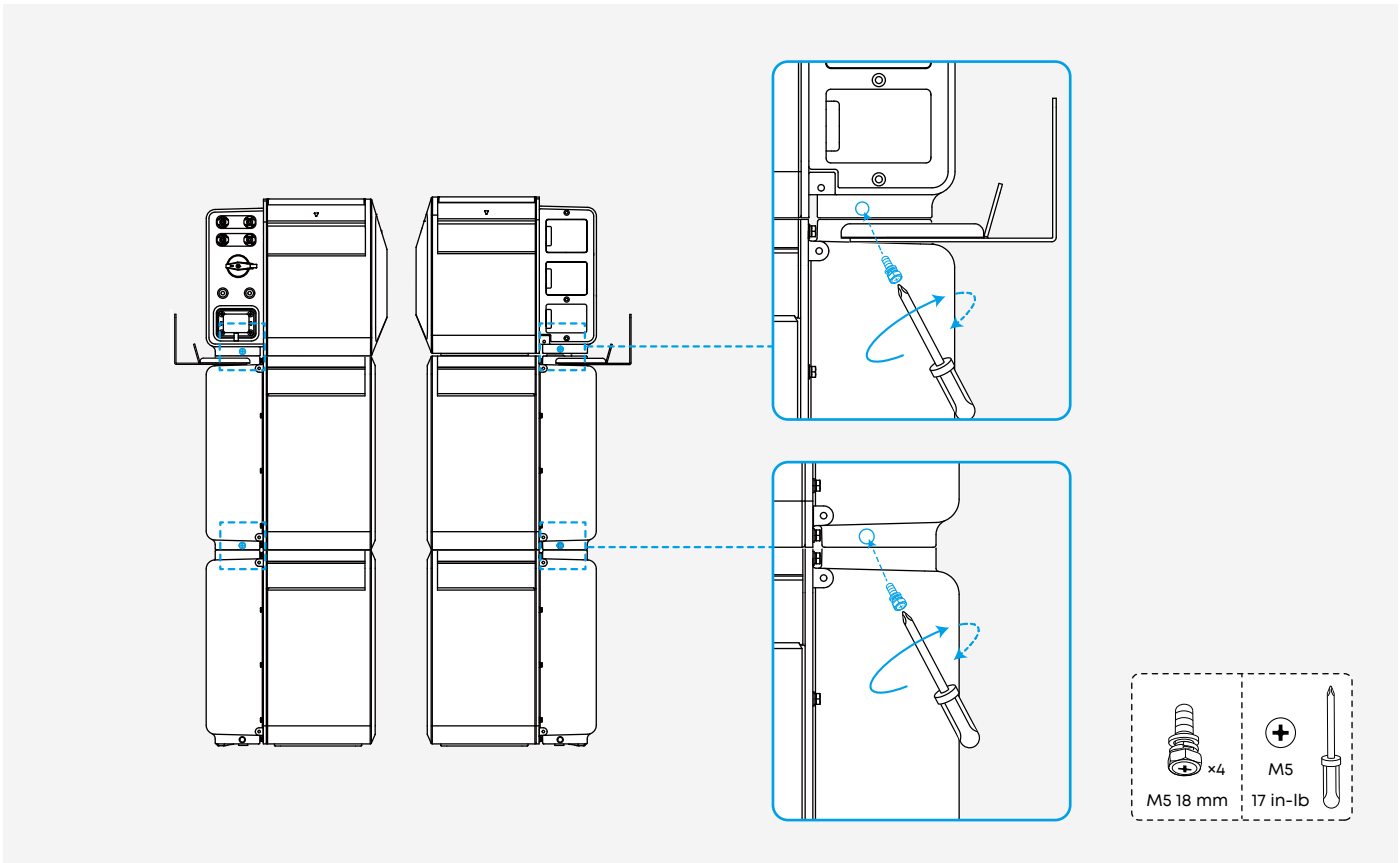

Method 2: Mount on Metal Pad

This method supports installation of one power module and up to five battery modules. The following steps describe how to install one power module and two battery modules as an example.

Step 1. Adjust Leveling Feet

Adjust the leveling feet on the metal pad to provide a flat surface.

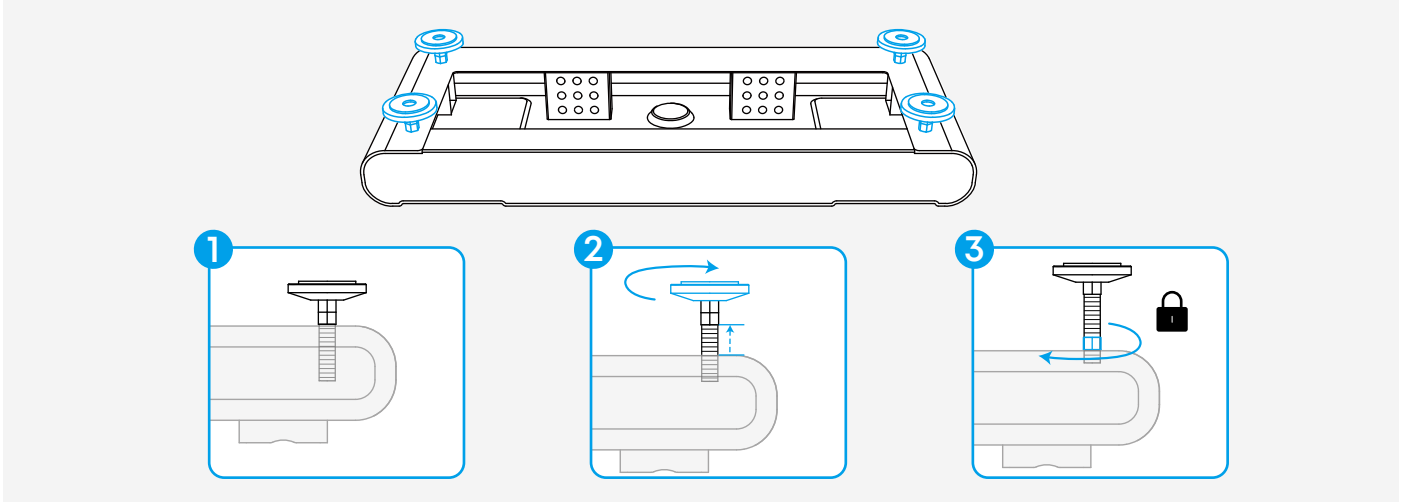

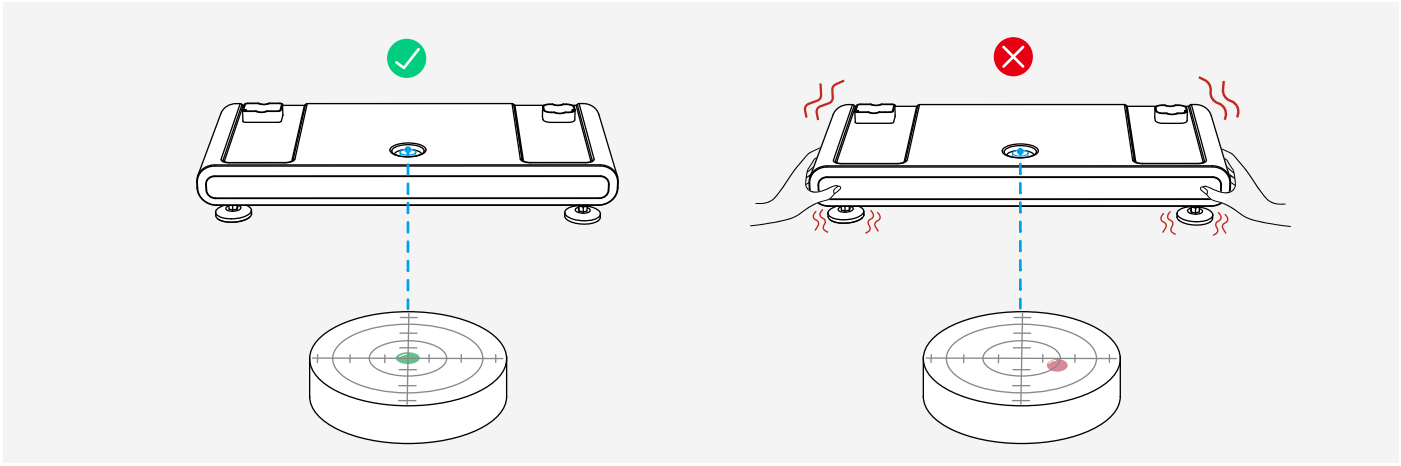

Step 2. Place the Metal Pad

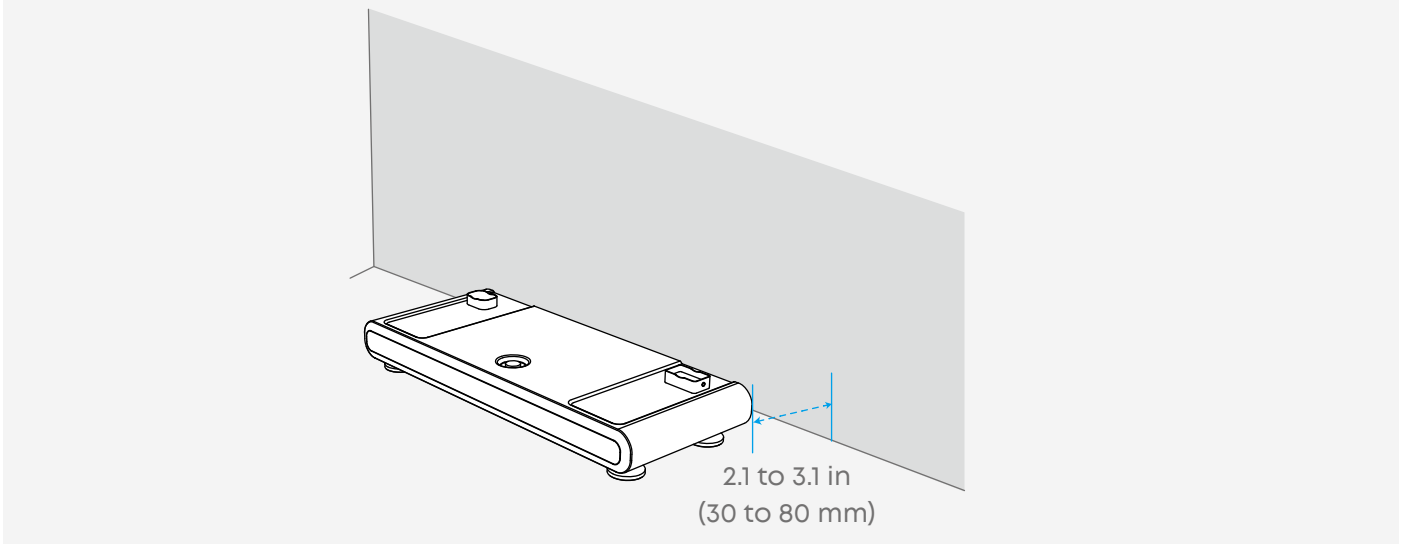

Step 3. Mount Battery Modules

Remove rubber plugs from battery ports before stacking.

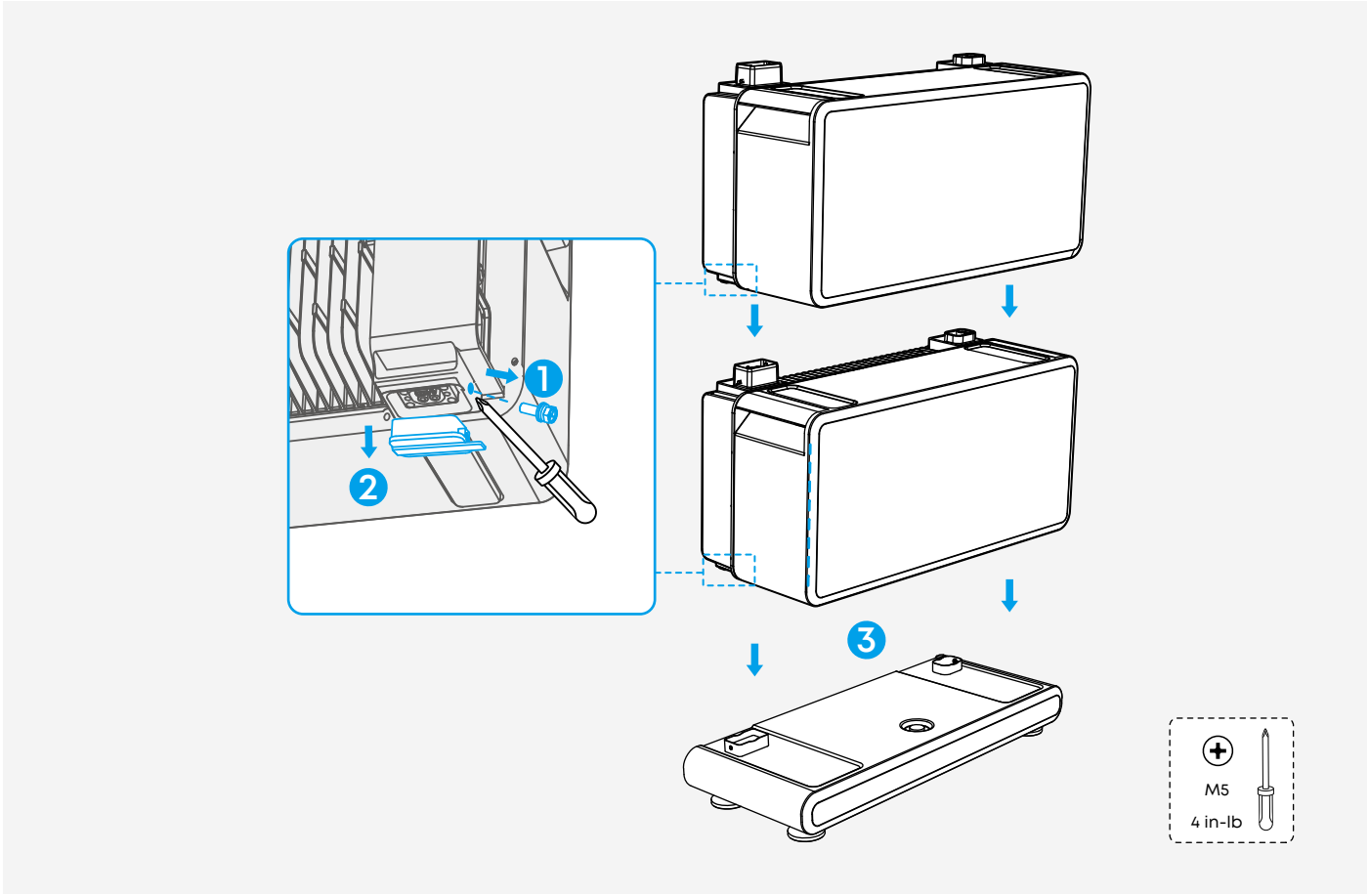

Step 4. Install the Fixed Bracket to Wall Studs

Number of Battery Modules	Fixed Bracket
1	No bracket is required.
2 to 3	Install one bracket on the top battery module.
4 to 5	Install one bracket on the top battery module. It is recommended to install another bracket on the third battery module.

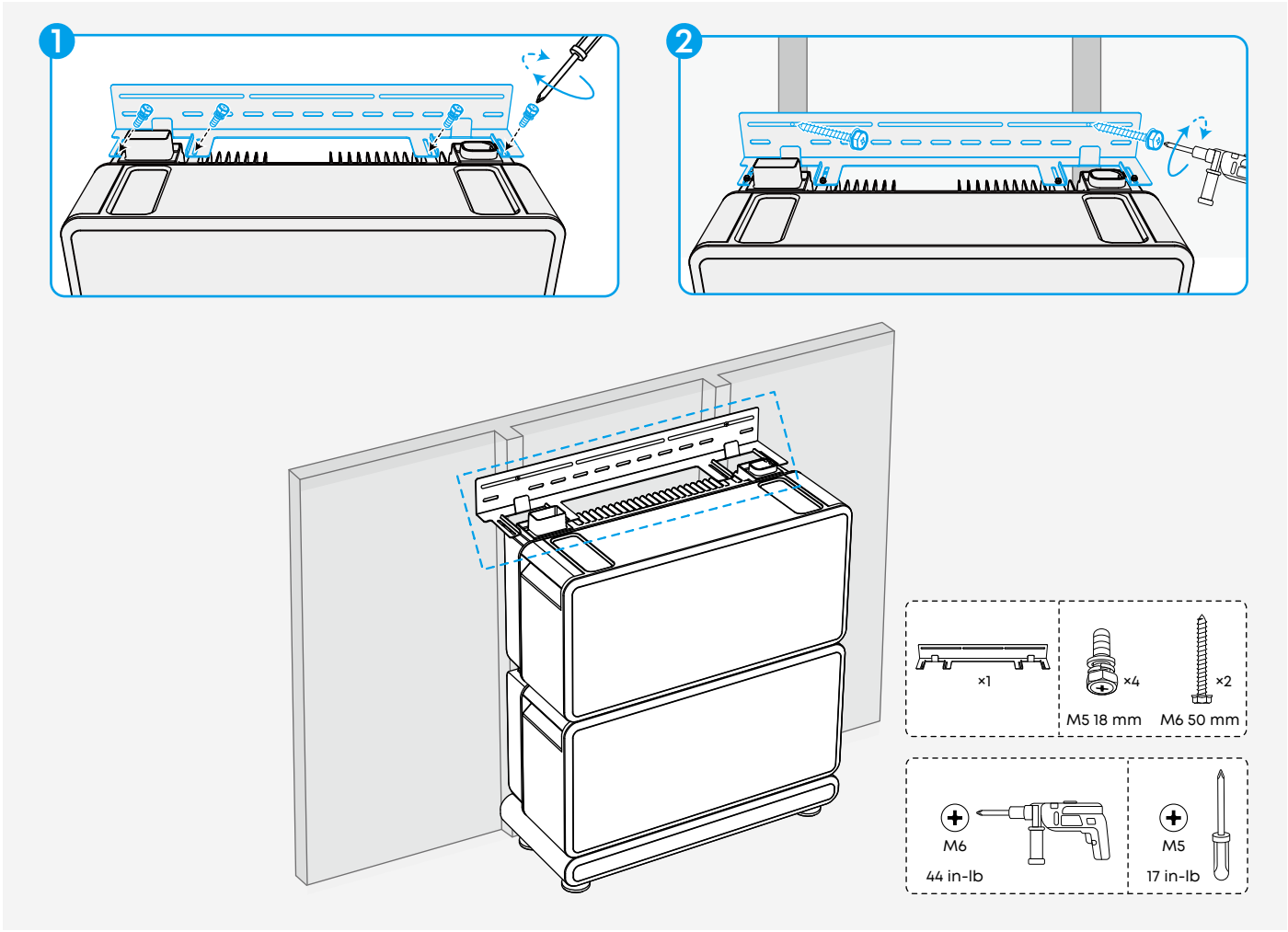

Step 5. Mount the Power Module

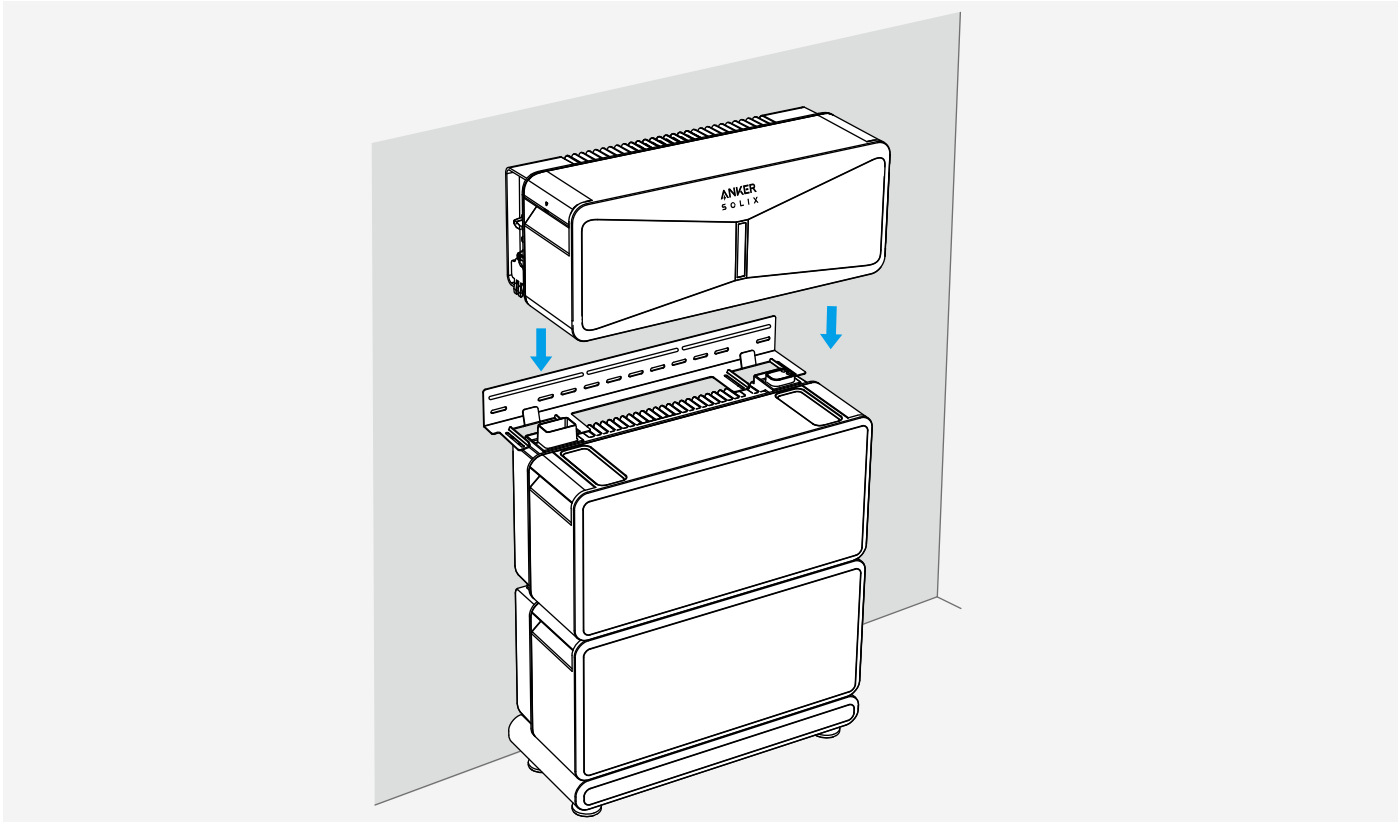

Step 6. Lock Modules

Use the screws included in the battery module package.

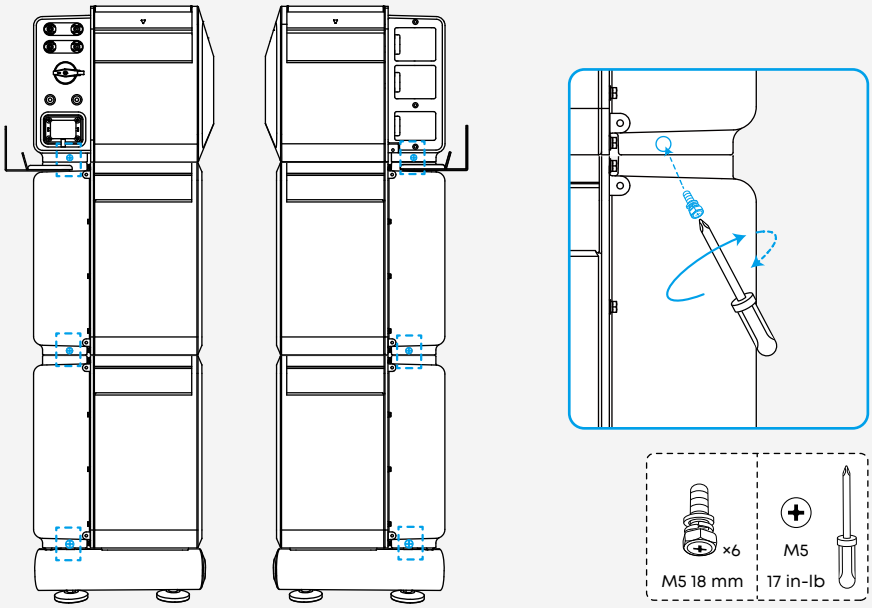

Method 3: Mount on Wall Bracket

This method supports installation of one power module and up to five battery modules. The following steps describe how to install one power module and two battery modules as an example.

Step 1. Assemble Bracket Holders with the Wall Bracket

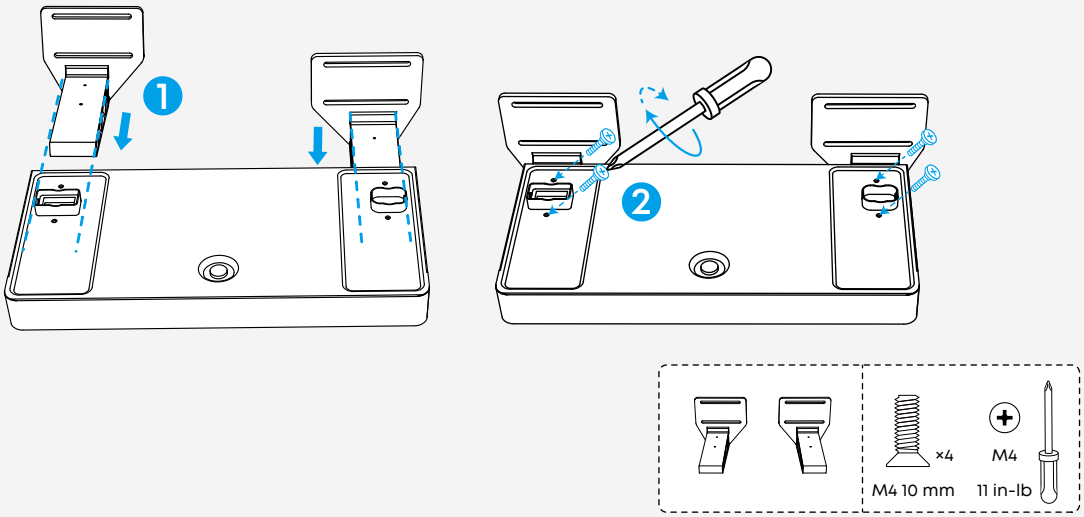

Step 2. Attach Bracket Holders to Wall Studs

Level the wall bracket and tighten screws securely.

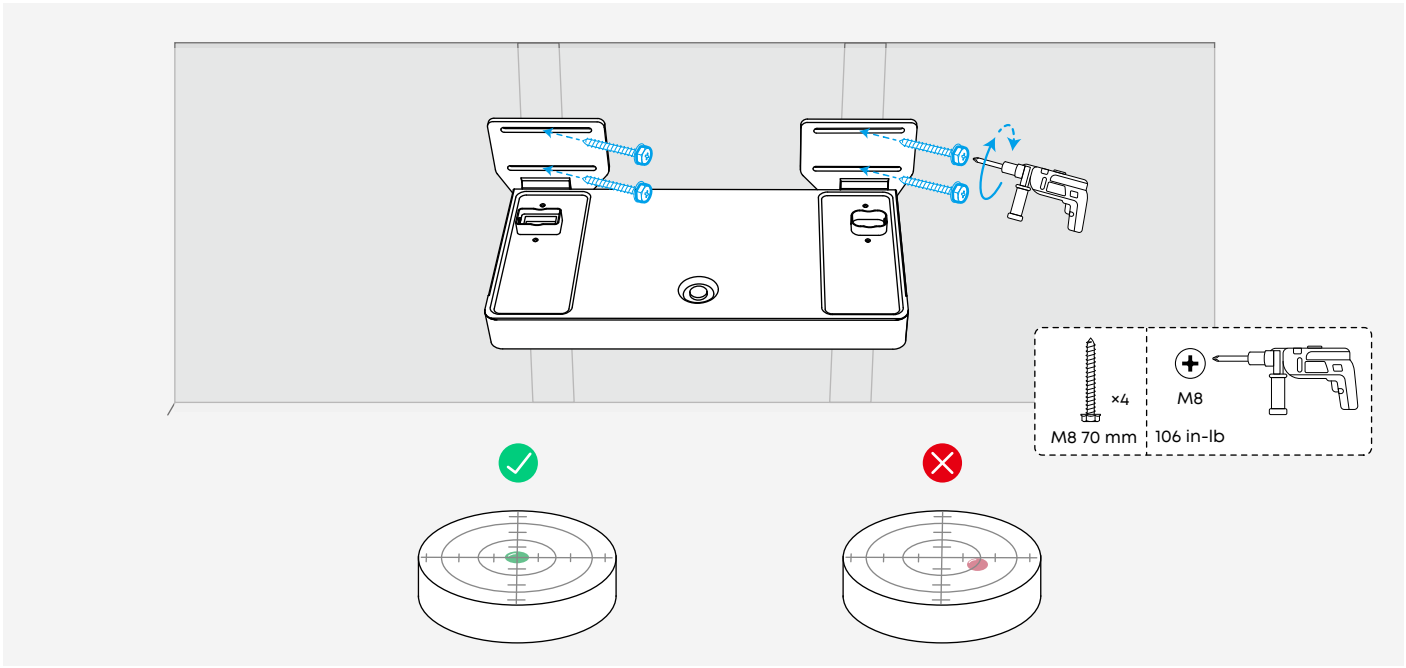

Step 3. Mount Battery Modules

Remove rubber plugs from battery ports before stacking.

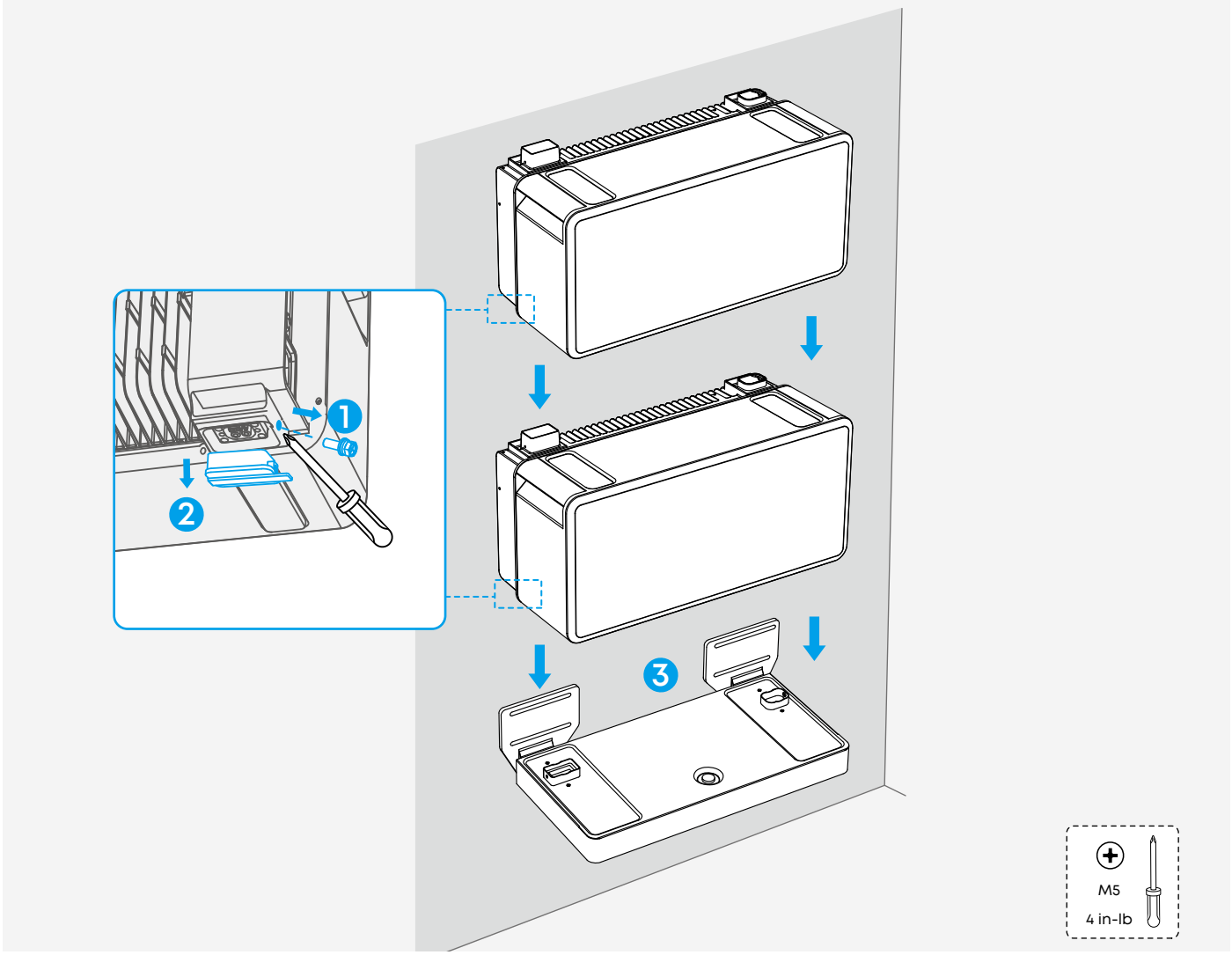

Step 4. Install the Fixed Bracket to Wall Studs

Number of Battery Modules	Fixed Bracket
1 to 3	Install one bracket on the top battery module.
4 to 5	Install one bracket on the top battery module. It is recommended to install another bracket on the third battery module.

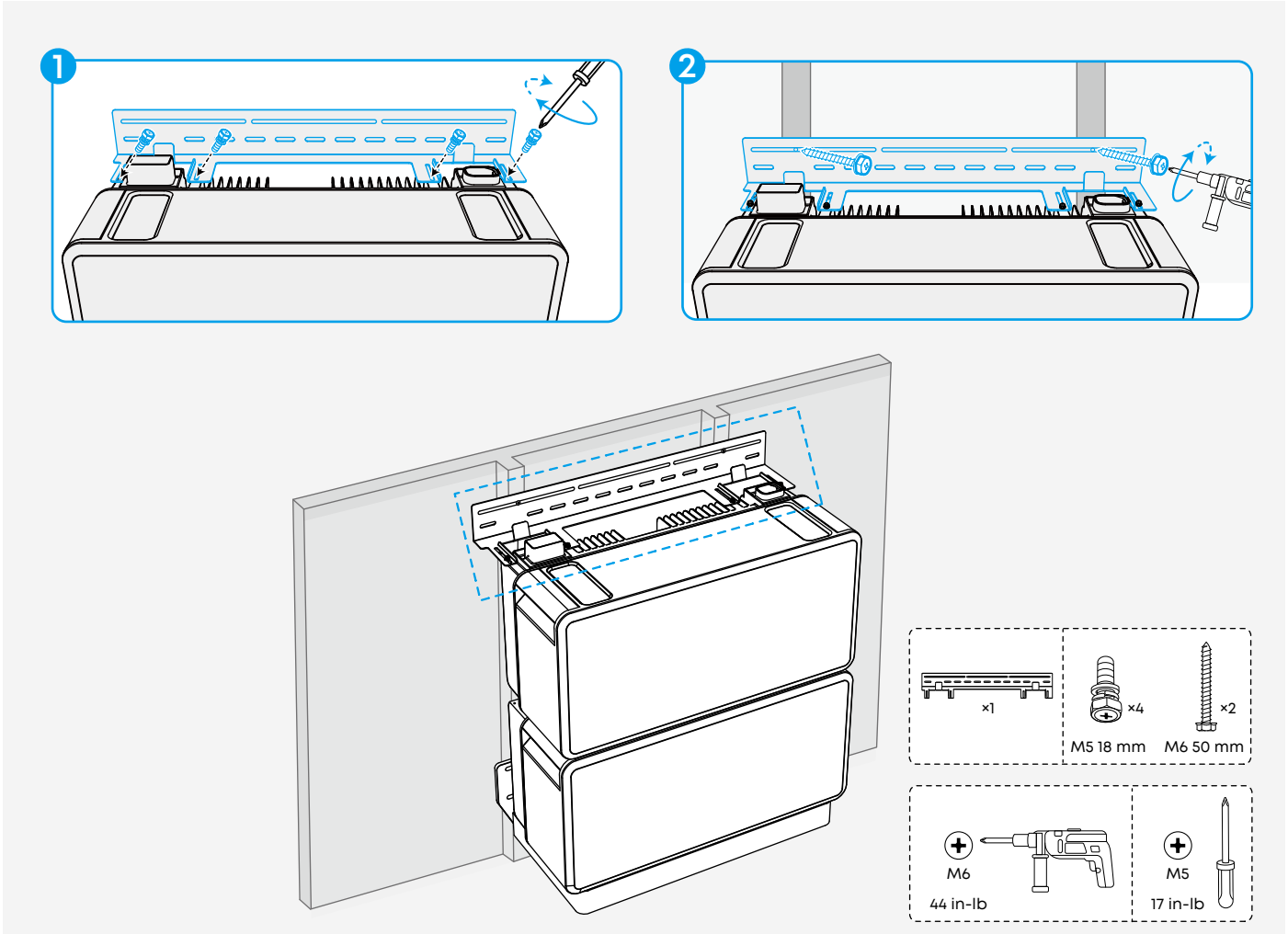

Step 5. Mount the Power Module

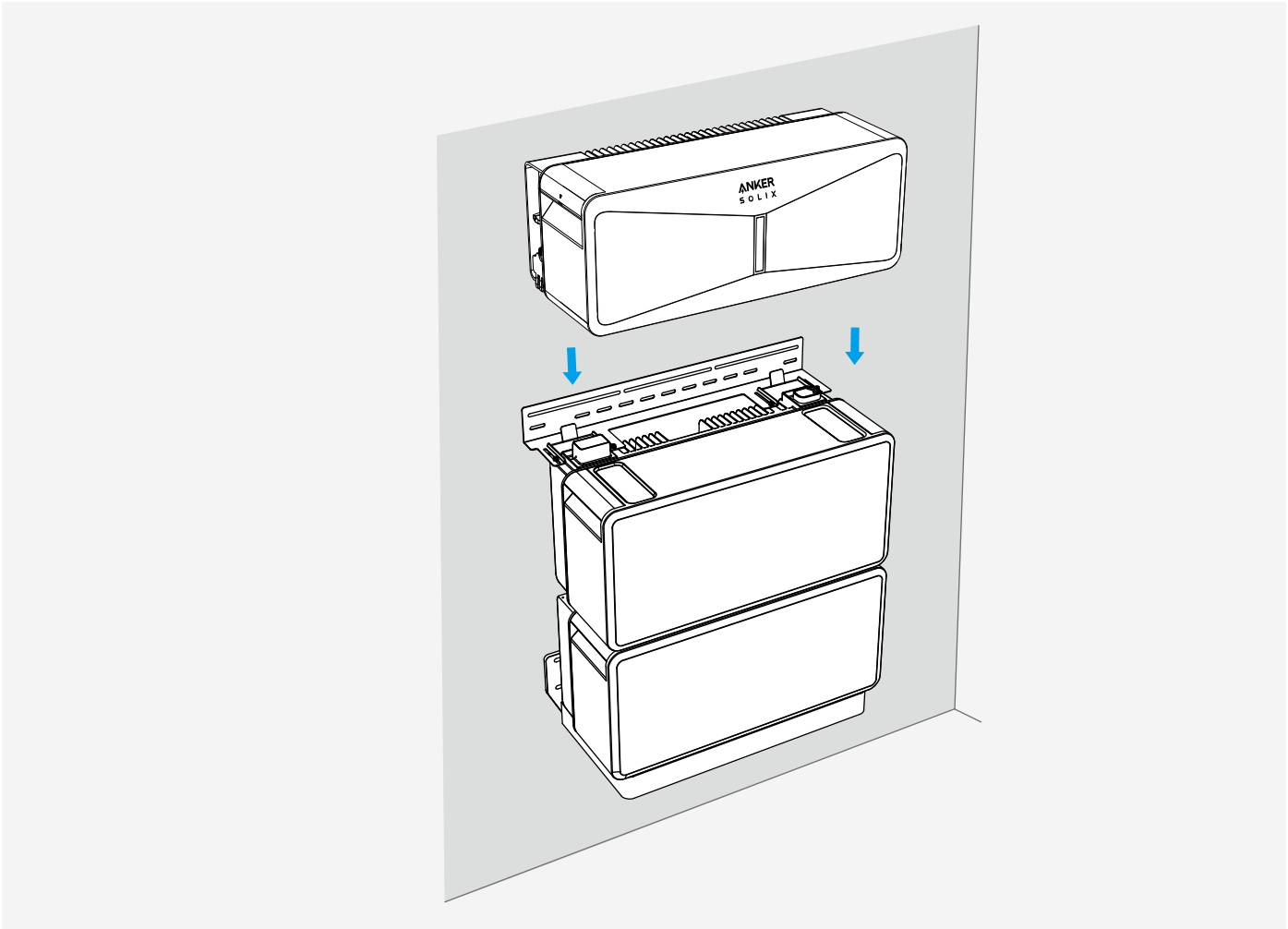

Step 6. Lock Modules

Use the screws included in the battery module package.

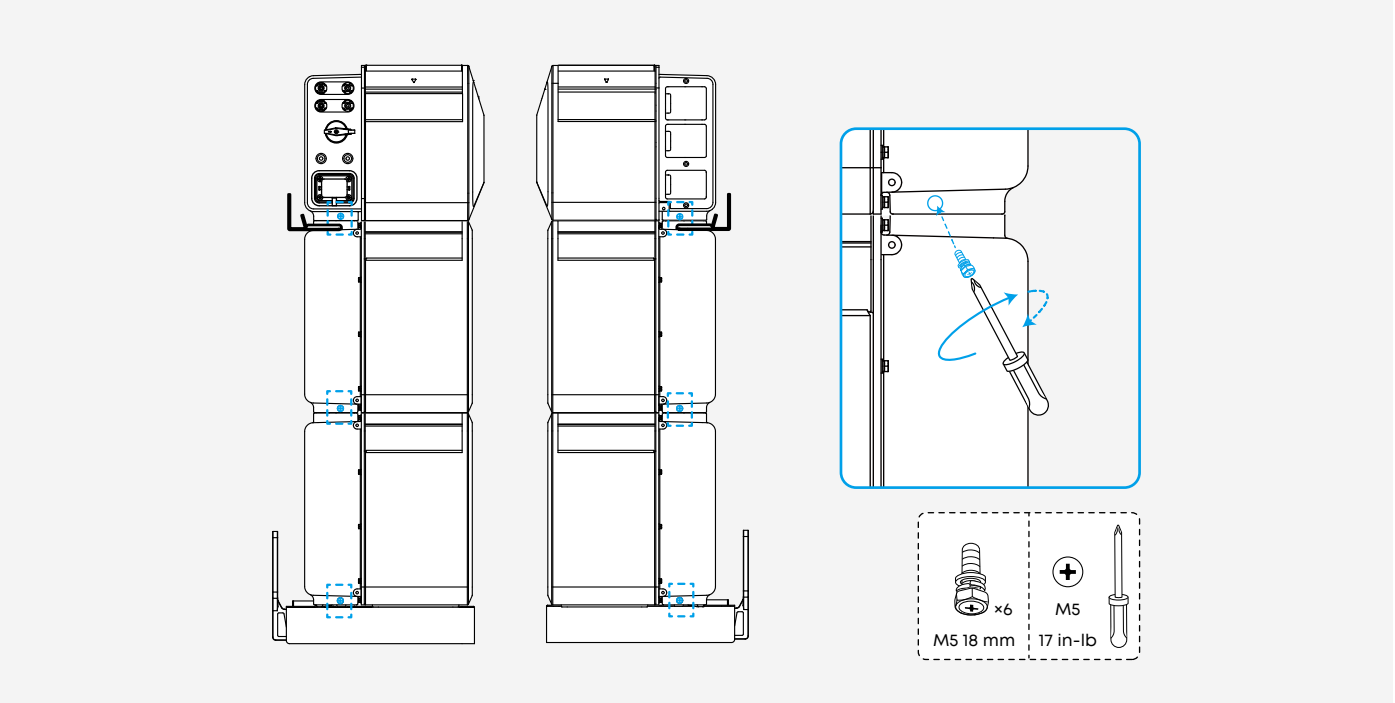

Method 4: Mount on Trolley

This method supports installation of one power module and one battery module.

Step 1. Mount the Battery Module

For indoor use, remove the bottom rubber plug as shown in the diagram.

For outdoor use, keep the bottom rubber plug in place to prevent water from entering the battery port.

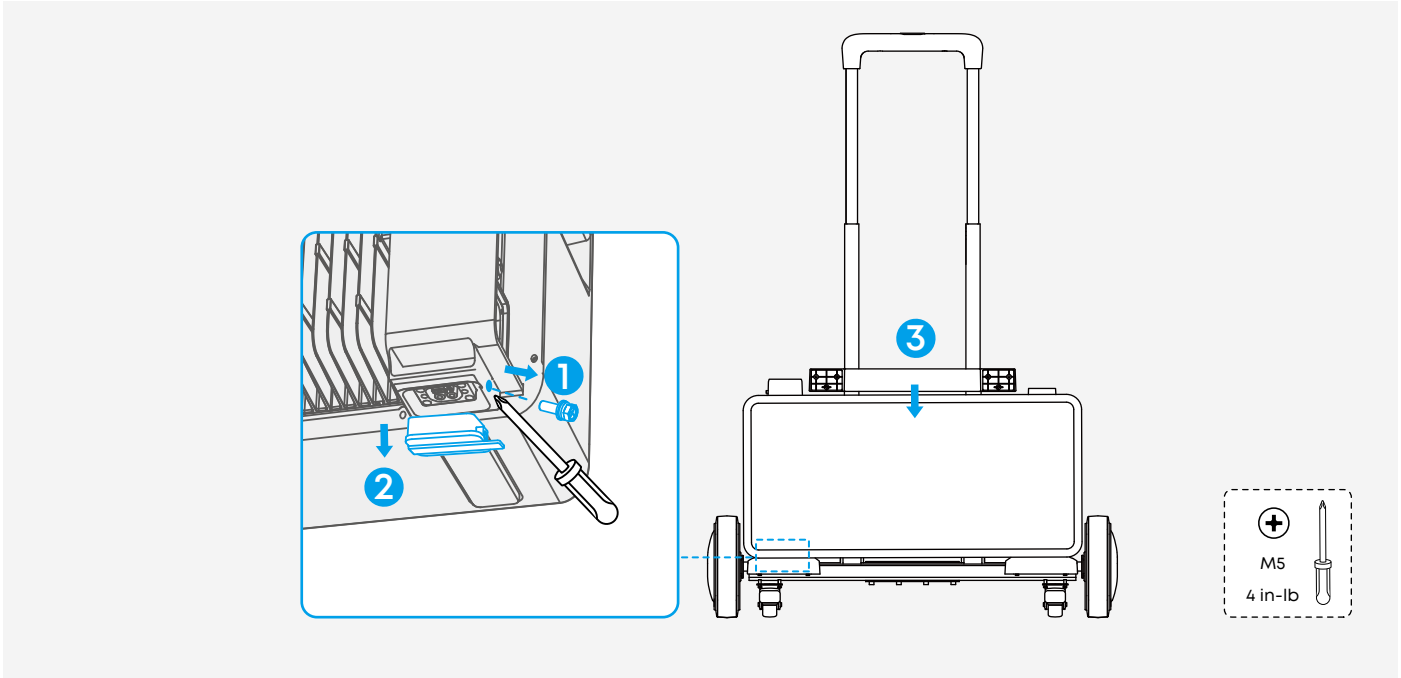

Step 2. Secure the Battery Module to the Trolley

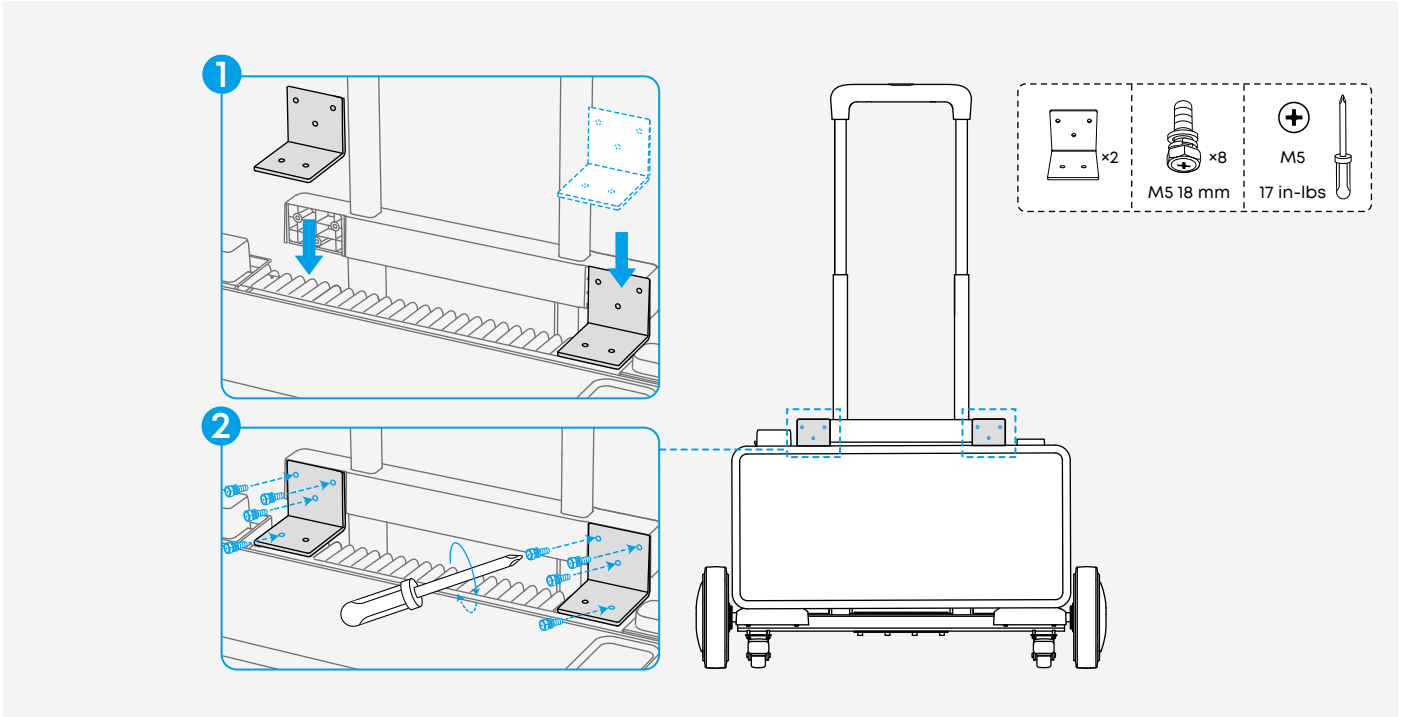

Step 3. Mount the Power Module

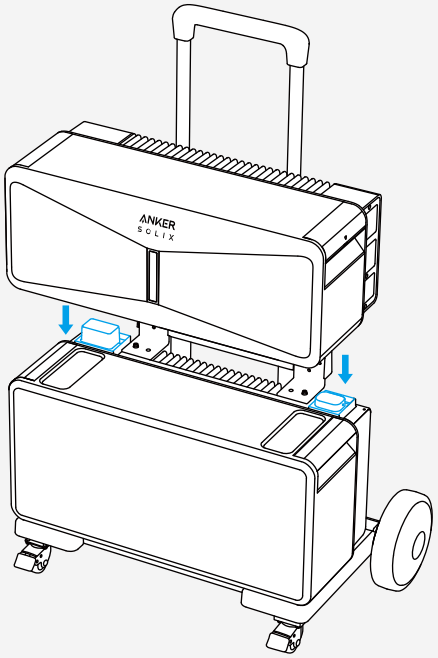

Step 4. Lock the Modules

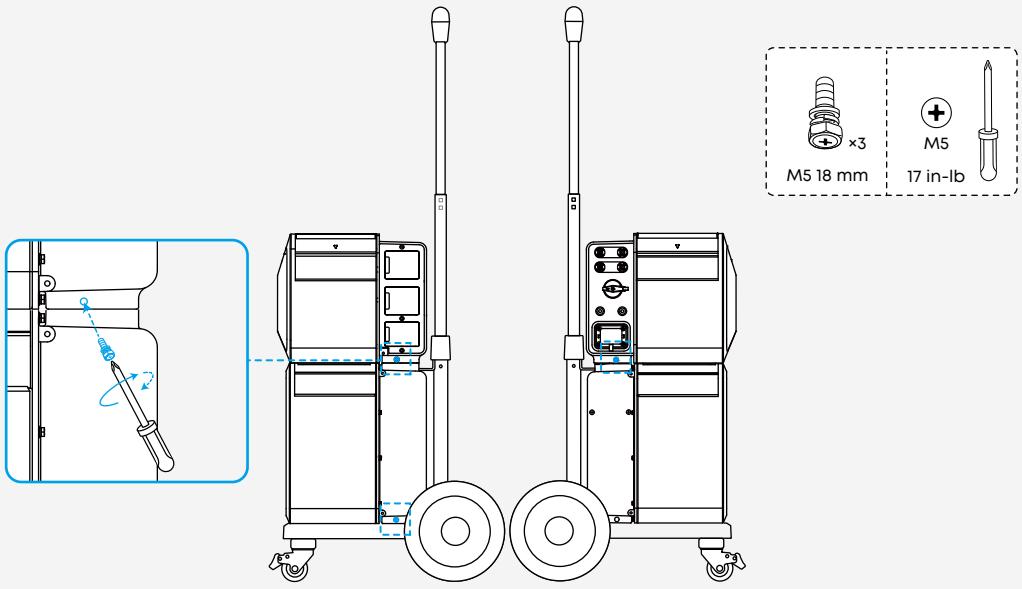

6. Device Setup

This section explains how to power on E10 and connect it to the Anker app for activation.

- Before first-time use, complete setup in the Anker app to activate your E10 system.
- The app images shown are for reference only and may vary depending on the software version.

6.1 Power On / Off

Press the power button for 3 seconds to turn on the power module. When turned on, the power module automatically enters networking mode.

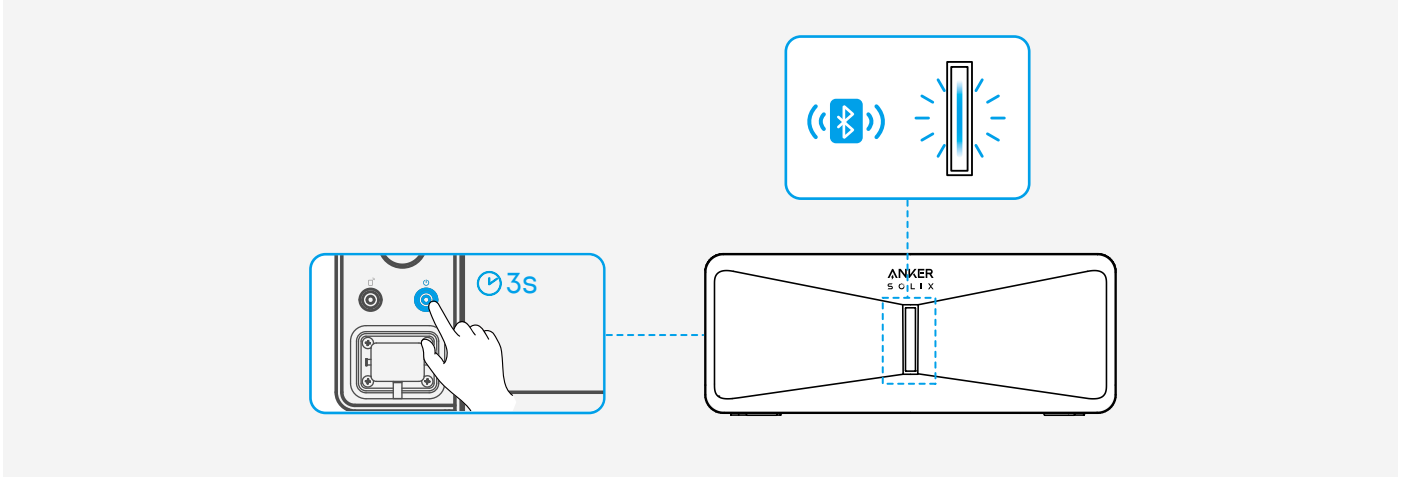

To turn off the power module, press the power button for 3 seconds.

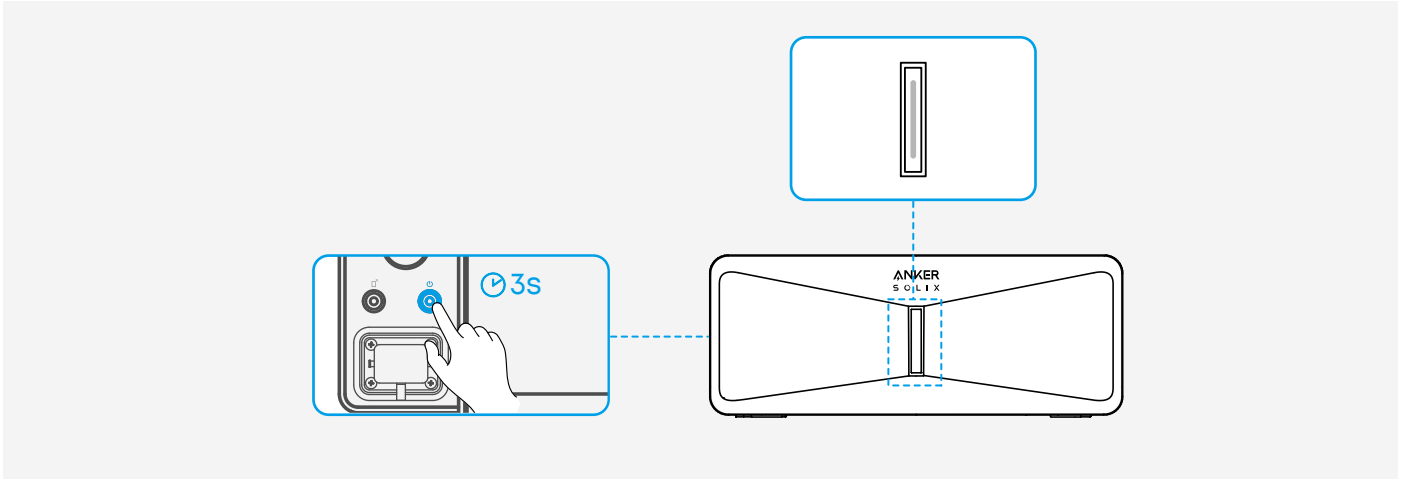

6.2 Use the Anker App

Ensure the power module is in networking mode.

1. Download the Anker app from the App Store (iOS devices), from Google Play (Android devices), or by scanning the QR code.

Anker

GET IT ON Google Play

Google Play and the Google Play logo are trademarks of Google Inc.

Download on the App Store

Apple and the Apple logo are trademarks of Apple Inc.

2. Add Anker SOLIX E10 to the app, and follow the in-app instructions to complete setup.

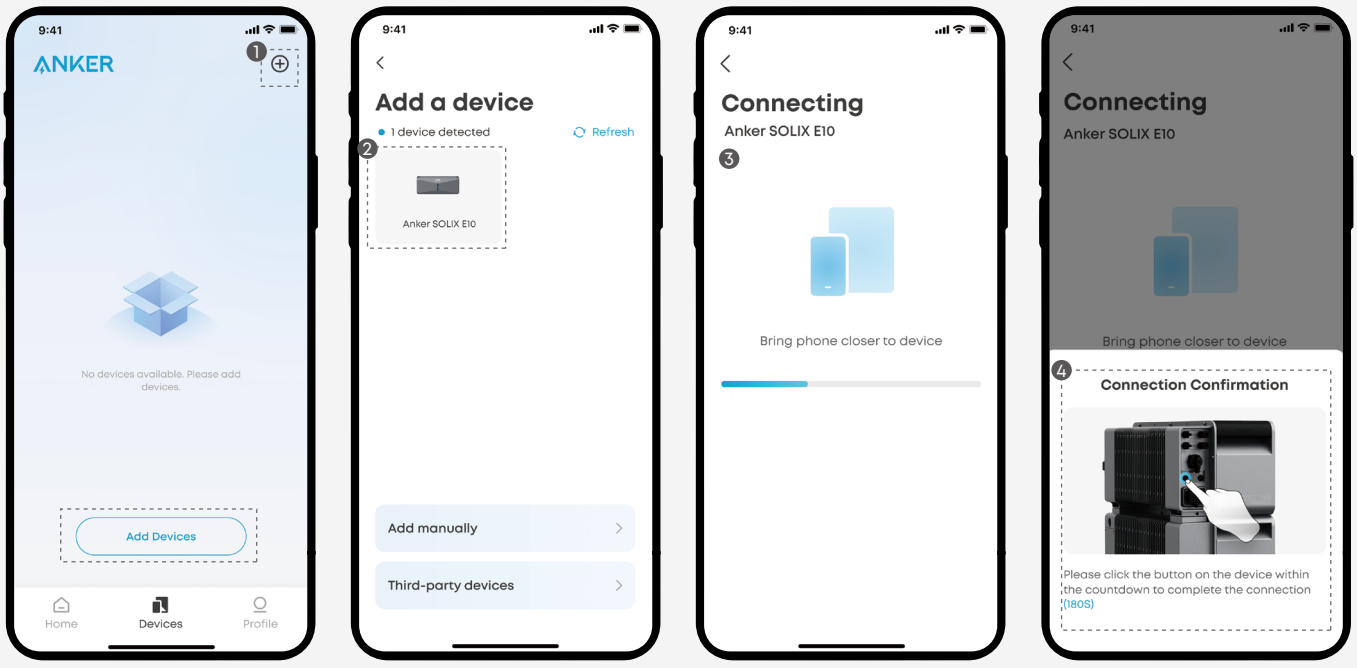

7. Charge Your E10

Before using your E10 System, learn how to connect various power sources for safe recharging.

7.1 Use the Cable Plug

Lock the plugs before connection. Unlock the plugs after connection.

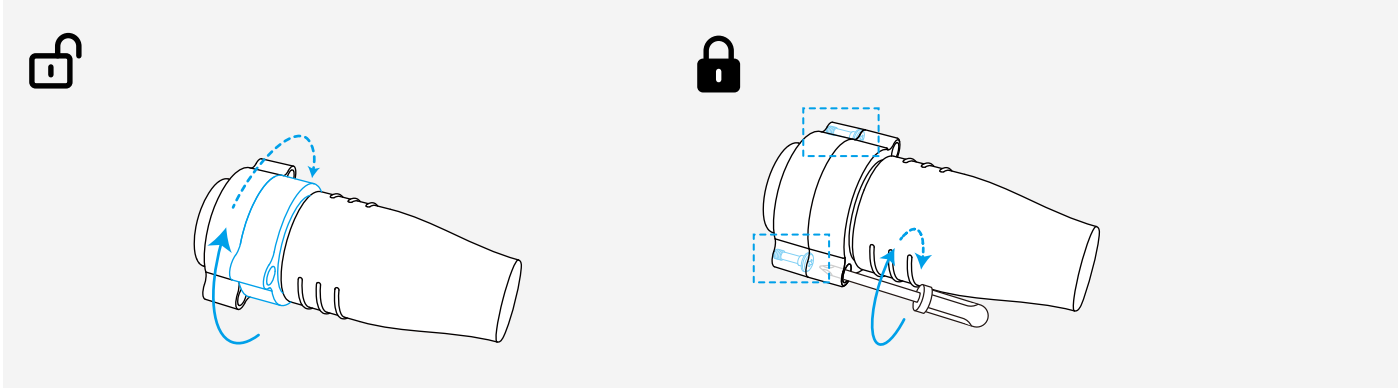

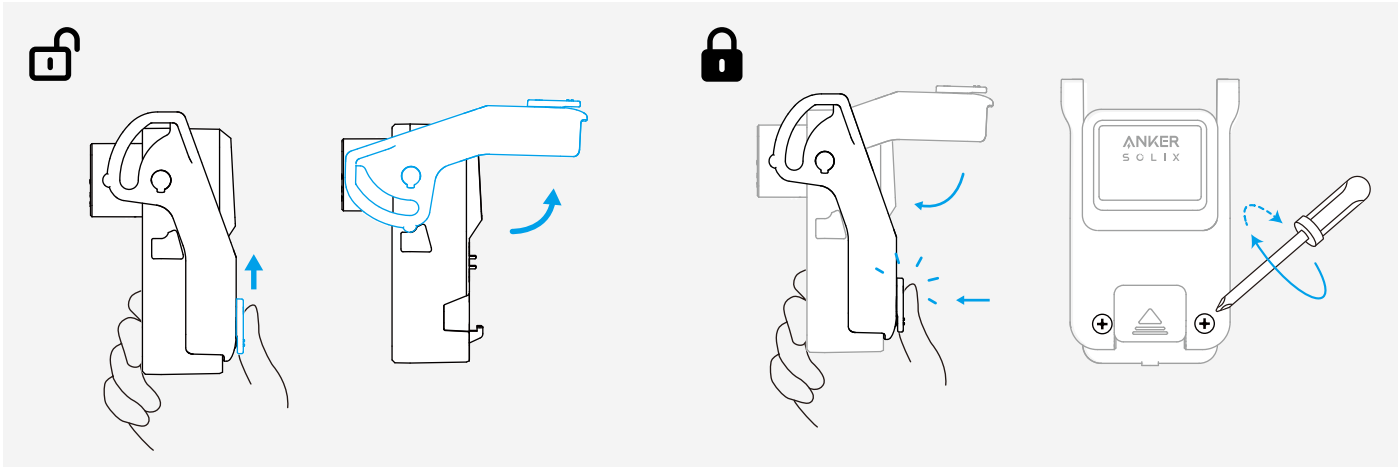

7.2 Recharge From a Wall Outlet

Connect the power module to a wall outlet using the included 120V AC charging cable.

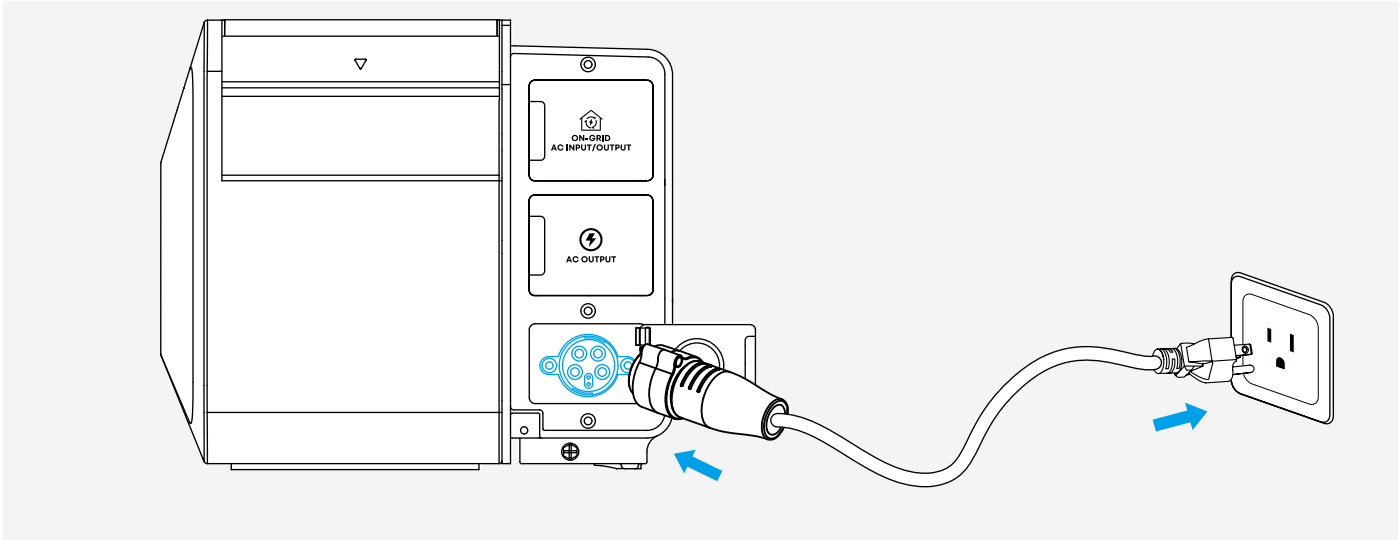

- E10 supports 120V / 1.8kW AC input using the supplied cable.
- E10 allows simultaneous AC input and output. While recharging from a 120V wall outlet, E10 can deliver 240V AC power at the same time through the 120V/240V power strip or 240V output cable.

7.3 Recharge From Solar Panels

- Seal unused PV input ports on the power module with waterproof caps to prevent moisture ingress.
- For safe installation, consult a qualified electrician to connect the power module to the solar panels.
- Ensure that the solar panel connectors are compatible with the PV input ports of the power module.
- Recharging time depends on the total output of solar panels and the sunlight intensity.
- When connecting two or more solar panels, use panels with identical specifications (current, voltage, and power). Mixing panel types may cause output imbalance.
- If extra cable length is required, use the Anker SOLIX Solar Panel Extension Cable (sold separately).

The following examples illustrate two primary connection methods: direct and series connections.

All other connection methods must meet the E10 input limits for each set of PV connector ports.

- Input Voltage: 30 to 450 VDC
- Input Current: < 15A
- Input Power: < 4.5kW

Direct Connection

- If you plan to connect the power module to a high-voltage solar system (over 165V), consult a qualified electrician or installer before purchase and installation.
- High-voltage solar systems installed on or inside buildings must include a rapid shutdown function in accordance with NEC regulations to protect emergency personnel from electric shock.

How to Connect

1. Ensure the PV switch on the power module is turned off.
2. Connect each solar panel to the same set of PV input ports.
3. Turn on the PV switch to start solar recharging.

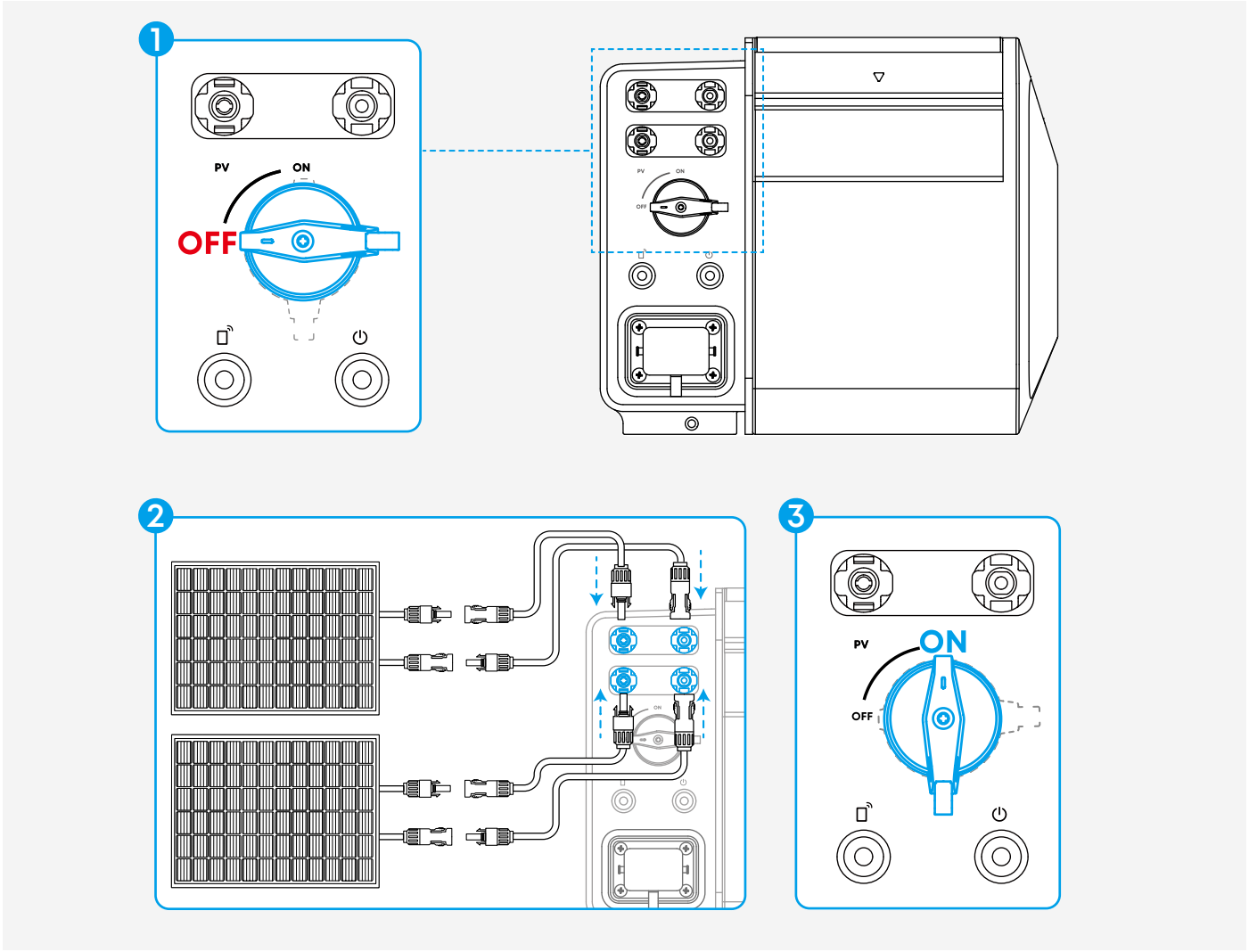

Series Connection

You can connect multiple solar panels in series to the power module.

How to Connect

1. Before connecting, confirm the key parameters of the solar panels.

Parameters	Example (Rigid Solar Panel)
Maximum Output Power	405W
Open-Circuit Voltage (Voc)	37.41V
Short-Circuit Current (Isc)	13.9A

2. Calculate how many panels can be safely connected in series.

Step	Description
1. Apply Formula	Number of Panels = Maximum PV Input Power ÷ Output Power of Single Panel
2. Perform Calculation	4,500W ÷ 405W ≈ 11 Panels
3. Verify Output Limits	Voltage: 37.41V × 11 = 411.51V **(<450V limit)** Current: 13.9A **(< 15A limit)**
4. Confirm Result	Up to 11 solar panels can be connected in series without exceeding the power module's PV input limit.

3. Connect solar panels in series using compatible solar connectors.

Example:
Eleven 405 W solar panels in series
Total output 411.51 V, 13.9 A (450 V/15 A PV input limit)

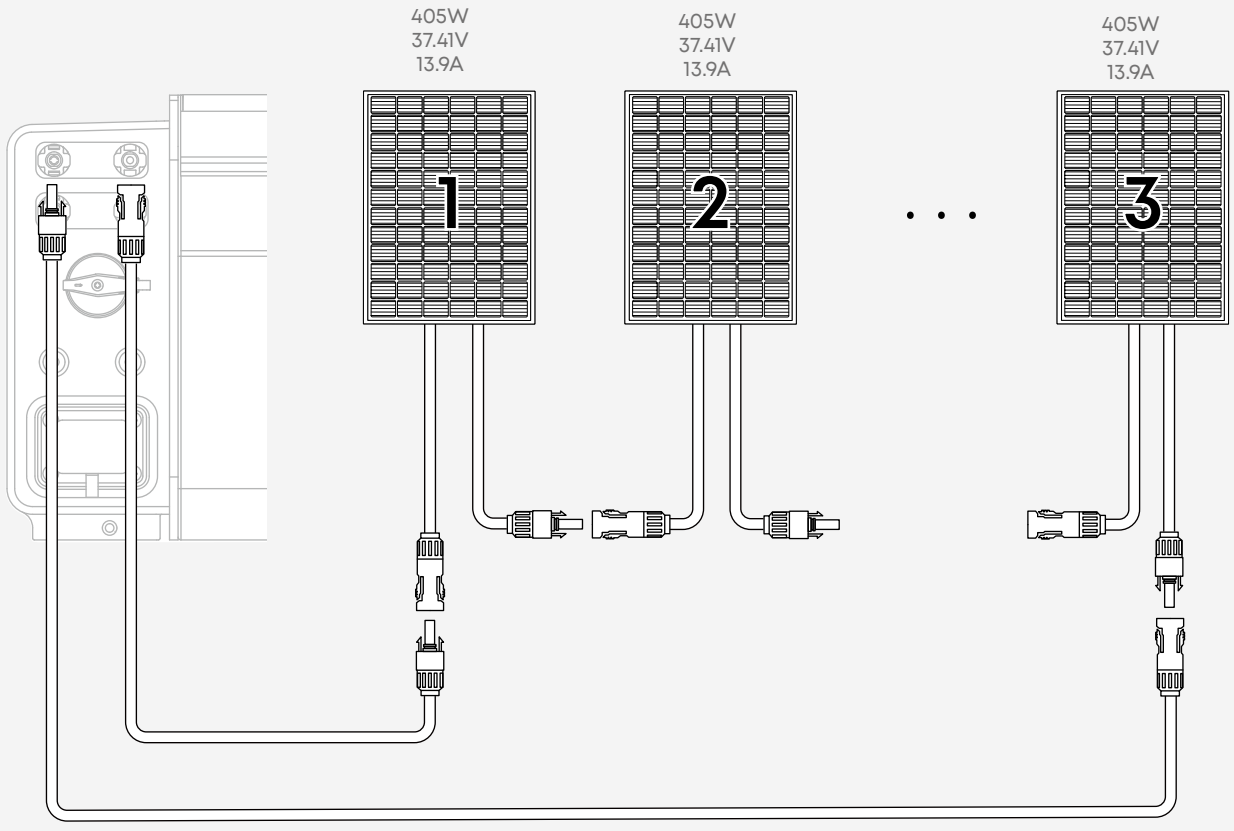

To disconnect solar connectors, use the included wrench.

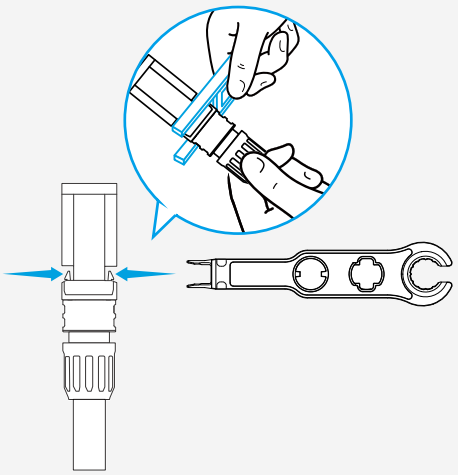

7.4 Recharge From Anker SOLIX Smart Generator 5500

Recharge E10 using Anker SOLIX Smart Generator 5500.

1. Turn off the generator engine before making any connections.
2. Connect the power module to the generator using the DC charging cable (included with the generator package).
3. Start recharging by either manually starting the generator engine or setting Auto-Start in the Anker app.

   For detailed instructions, see the section Range-Extended Backup System (A17E1, A7320) in the E10 System and App Guide.

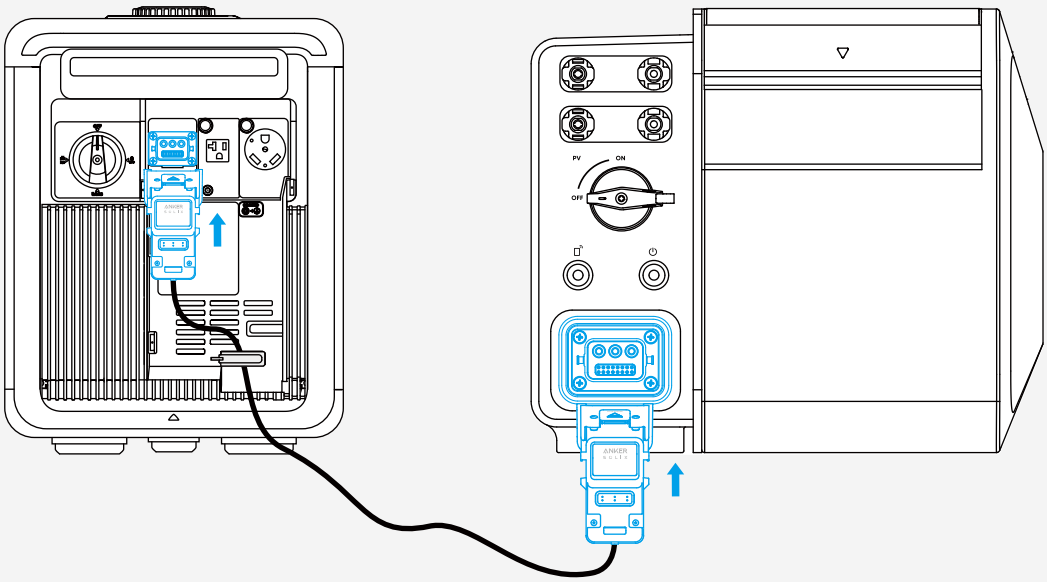

7.5 Recharge From Third-Party Generator

1. Turn off the generator engine before making any connections.
2. Connect the power module to the generator using **Anker SOLIX E10 AC Generator Adapter** (sold separately) and the generator's output cable (not included).
3. Turn on the generator engine to start recharging.

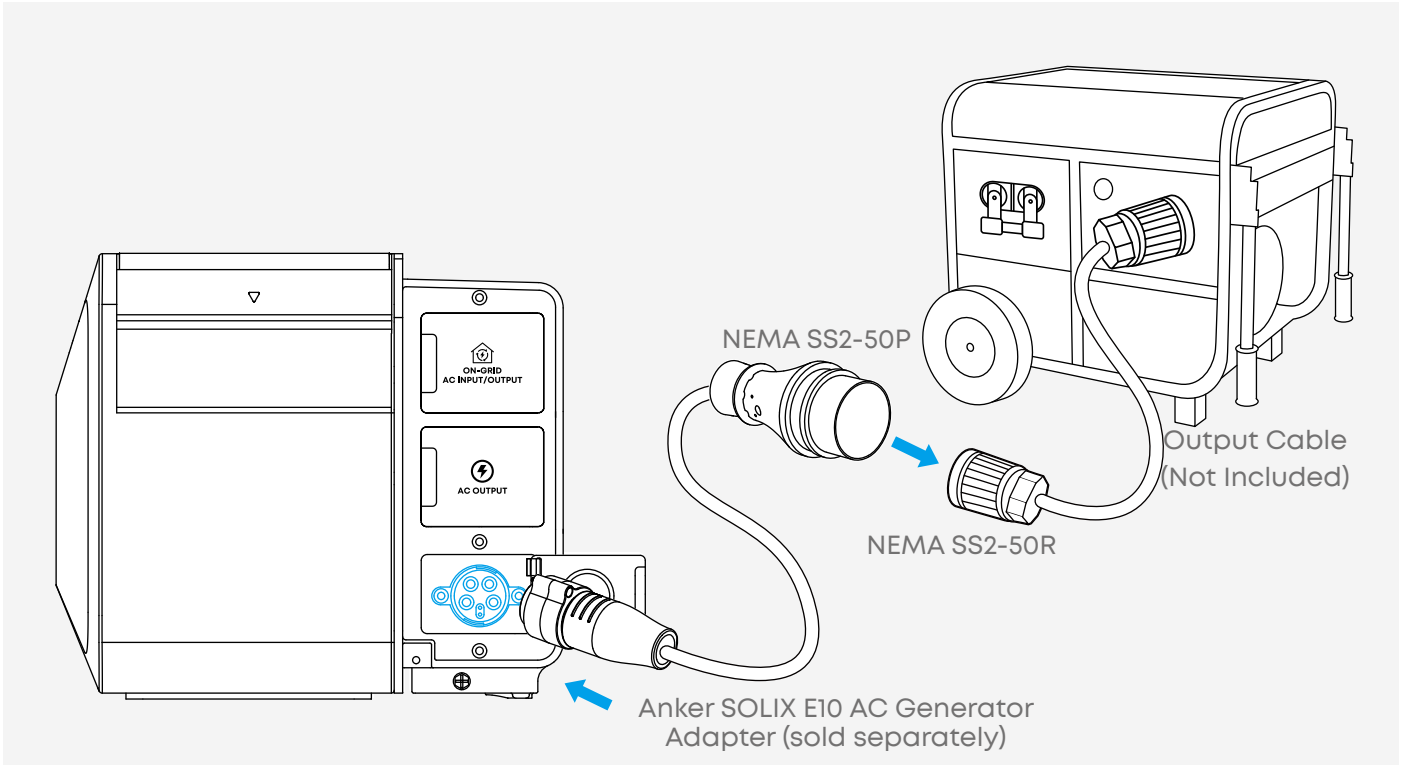

· E10 supports third-party AC generators that have Total Harmonic Distortion (THD) less than 10%.

· E10 cannot start a central air conditioner when charged by a third-party generator. This type of generator lacks the peak power required for startup and may become overloaded.

· E10 allows simultaneous AC input and output. While recharging from a 120/240V AC generator, E10 can bypass 240V AC power at the same time through the 120V/240V power strip or 240V output cable.

· Set the rated output power of the generator in the Anker app. This prevents generator overload and ensures stable operation.

8. Power Your Devices

This section explains how to supply power to home devices and backup circuits using E10.

Before powering any device, make sure E10 is turned on.

8.1 Power Home Devices (Normal Use)

Use Anker SOLIX E10 120V/240V Power Strip (sold separately) to power your home devices directly.

1. Connect the power strip to the power module.
2. Open the power strip cover.
3. Switch on the power strip.
4. Press the power button on the power module to enable AC output.

   Once the light bar turns blue, the power module has started to power your devices.

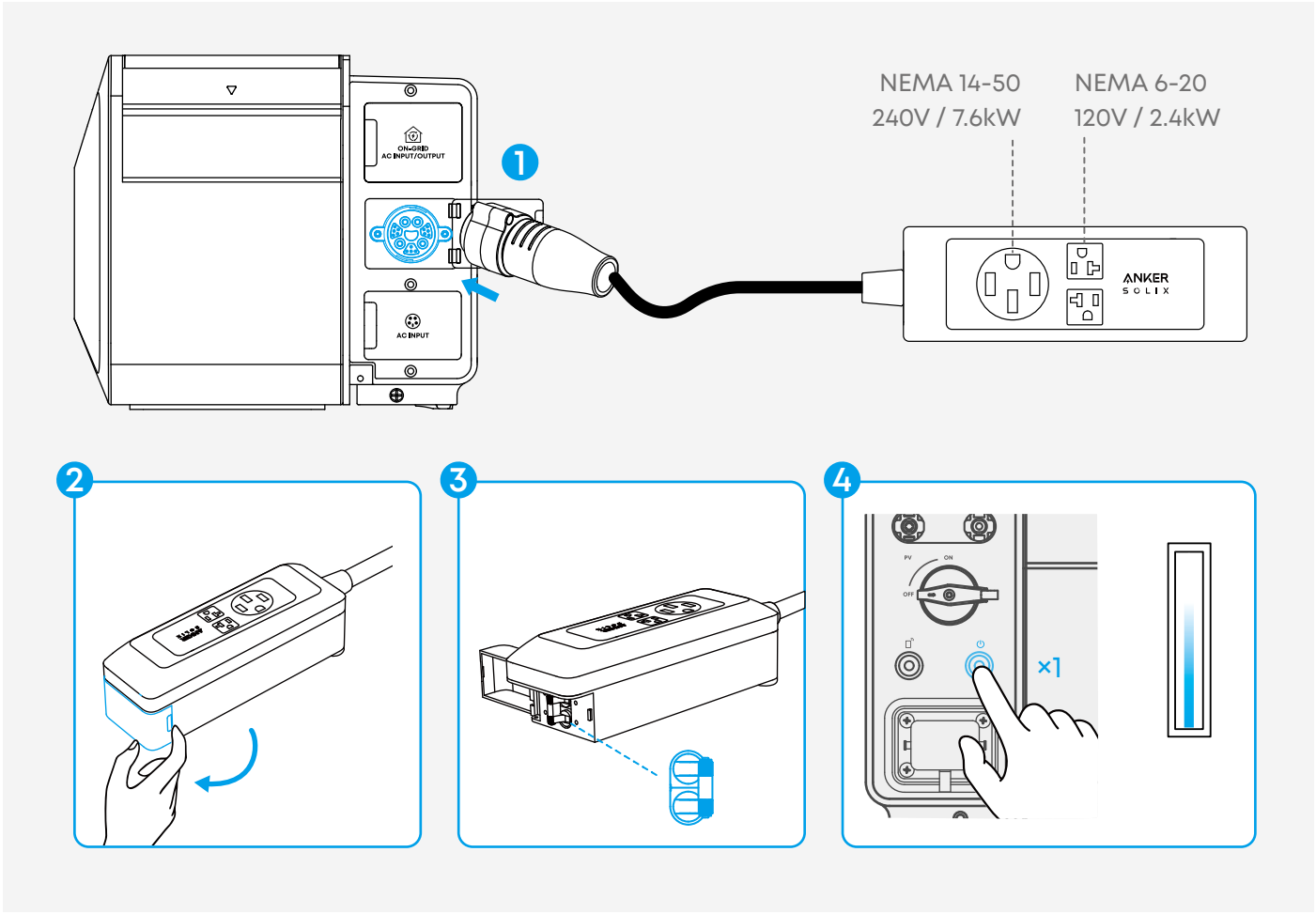

8.2 Power Transfer Switch (In a Grid Outage)

E10 can serve as a home backup power source when connected to a 240V transfer switch.

1. Connect one end of the 240V output cable (included) to the power module.
2. Connect the other end of the 240V output cable to the transfer switch.
3. Press the power button on the power module to enable AC output.

   The light bar will turn blue, indicating that the power module has started to power your devices.

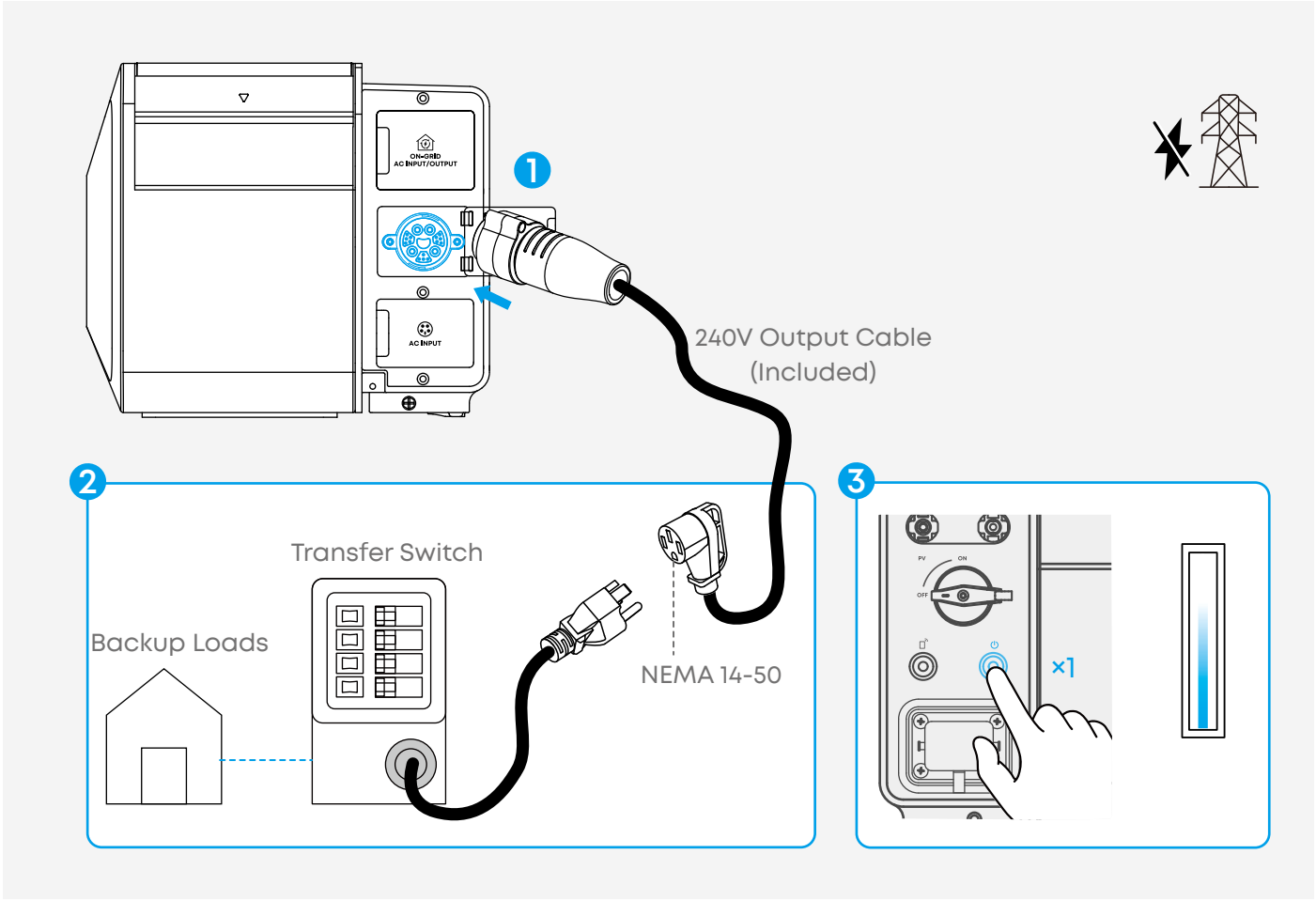

9. Specifications

Specifications are subject to change without notice.

9.1 Anker SOLIX E10 Power Module

Model	A17E1
On-Grid AC Port	
Rated Voltage	120 / 240 VAC (Split Phase)
Rated Frequency	60Hz
Maximum Continuous Input / Output Current	32A
Maximum Continuous Input / Output Power	7.68kW
Peak Backup Output Current / Power (With Two Battery Modules or More)	41.6A / 10kW (90 minutes, ambient temperature < 86°F / 30°C)
Backup AC Port	
Rated Voltage	120 / 240 VAC (Split Phase)
Rated Frequency	60Hz
Maximum Continuous Output Current (With Battery Module)	32A
Maximum Continuous Output Power (With Battery Module)	7.68kW
Peak Backup Output Current / Power (With Two Battery Modules or More)	41.6A / 10kW (90 minutes, ambient temperature < 86°F / 30°C)
LRA Equivalent Ability	275A (2 or more power modules in parallel, each connected to 2 or more battery modules) 155A (1 power module with 2 or more battery modules) 120A (1 power module with 1 battery module)
Maximum Continuous Output Current (AC Generator Bypass)	40A
Maximum Continuous Output Power (AC Generator Bypass)	9.6kW
AC Input Port	
120V Recharging	
Rated Voltage	120 VAC
Rated Frequency	60Hz
Maximum Input Current	15A Max (< 3 hours when the current exceeds 12A)
Maximum Input Power	1.8kW

240V Recharging	
Rated Voltage	120 / 240 VAC (Split Phase)
Rated Frequency	60Hz
Maximum Input Current	32A
Maximum Input Power	7.68kW
AC Bypass Mode	
Rated Voltage	120 / 240 VAC (Split Phase)
Rated Frequency	60Hz
Maximum Input Current	40A
Maximum Input Power	9.6kW
Battery Input / Output	
Charge / Discharge Voltage Range	380 to 450 VDC
Maximum Charge / Discharge Current	23.7 / 21.1A
Maximum Charge / Discharge power	9 / 8kW
Peak Discharge Current / Power (With Two Battery Modules or More)	25A / 10kW (90 minutes, ambient temperature < 86°F / 30°C)
DC Solar Input	
MPPTs	2
PV DC Input Voltage Range	30 to 450 VDC
Maximum Current per MPPT (Imp)	15 ADC
Maximum Short Circuit Current per MPPT (Isc)	20 ADC
Each MPPT Maximum Input Power	4.5kW
DC Generator Input	
DC Input Voltage Range	380 to 450V
Maximum Input Current	12A Max
Maximum Input Power	4.5kW
Others	
Connectivity	Wi-Fi, Bluetooth
Mounting Option	Floor Mount / Wall Mount
Dimensions (W × H × D)	26.4 × 11.8 × 10.2 in (670 × 300 × 260 mm)
Weight	60.6 lbs (27.5 kg)
Enclosure Type	NEMA 4
Operating Temperature	-4 to 131 °F (-20 to 55°C)
Warranty	5 Years Limited

Safety and Compliance	
Certification	UL 1741, CSA C22.2 No. 107.1:16, UL 1699B, ANSI / CAN / UL 9540, ANSI / CAN / UL 9540A, UL 1741 SB, IEEE Std 1547:2018, IEEE Std 1547a:2020, IEEE Std 1547.1:2020, SRD 2.0, CPUC Rule 21, UL 3141, UL1741CRD(PCS), UL1998, California Public Utilities Commission Resolution E-5000 & E-5036, ANSI / CAN / UL 2743, UL 1778, CSA C22.2 No. 107.3-14, UL 1012, CSA C22.2 No. 107.1, 47 CFR Part 15, Subpart B, 47 CFR Part 15, Subpart C 15.247, ICES-003, RSS247, CP65, TSCA, PFAS, CEC-300-2018-009-CMF, Appendix section C · "Inverters", Energy Commission's Solar Equipment Lists

9.2 Anker SOLIX B6000 Battery Module

Model	A17E1141-85
Performance	
Battery Type	Li-ion (LFP)
Capacity	6,144 Wh
Battery Terminal Voltage Range	380 to 450 VDC
Maximum Charge / Discharge Power	6 / 8kW
Maximum Charge / Discharge Current	15.8 / 21.1A
Others	
Mounting Option	Floor Mount / Wall Mount
Dimensions (W x H x D)	26.4 × 12.7 × 11.1 in (670 × 322 × 281 mm)
Weight	130 lbs (59 kg)
Enclosure Type	NEMA 4
Operating Temperature	-4 to 131 °F (-20 to 55 °C)
Warranty	5 Years Limited
Certification	ANSI / CAN / UL 1973,UL 60730-1:2016 Annex H, ANSI / CAN / UL 9540, ANSI / CAN / UL9540A, ANSI / CAN / UL 2743, UL 1778, CSA C22.2 No. 107.3-14, UL 1012, CSA C22.2 No. 107.1, 47 CFR Part 15, Subpart B, ICES-003, CP65, TSCA, PFAS, UN38.3, Energy Commission's Solar Equipment Lists

10. Safety Information

10.1 Safety Symbols

Symbols	Description
	**Danger** Indicates a highly risky hazard. Failure to avoid this hazard could result in death or serious injury.
	**Warning** Indicates a moderately risky hazard. Failure to avoid this hazard could result in death or serious injury.
	**Caution** Indicates a low-risk hazard. Failure to avoid this hazard could result in minor or moderate injury.

10.2 Environmental Safety



- Do not expose the equipment to flammable or explosive gas or smoke. Do not perform any operation on equipment in such environments.
- Do not store any flammable or explosive materials around the equipment.
- Do not place the equipment near heat sources or fire sources, such as smoke, candles, heaters, or other heating devices. Overheating may damage the equipment or cause a fire.



- Install the equipment away from liquids. Do not install it under areas prone to condensation, such as under water pipes and air exhaust vents, or areas prone to water leakage, such as air conditioner vents, ventilation vents, or feeder windows of the equipment room. Ensure that no liquid enters the equipment to prevent faults or short circuits.
- To prevent damage or fire due to high temperature, ensure that the ventilation vents or heat dissipation systems are not obstructed or covered by other objects while the equipment is running.

General Instructions

- The installation and usage environment must meet relevant international, national, and local standards for lithium batteries, and are in accordance with the local laws and regulations. The user is obliged to protect the equipment against fire or other

hazards.

- Keep the equipment out of the reach of children and away from daily working or living areas, including but not limited to the following areas: studio, bedroom, lounge, living room, music room, kitchen, study, game room, home theater, sunroom, toilet, bathroom, laundry, and attic.
- When installing the equipment in a garage, keep it clear of the drive path. It is recommended that the equipment be mounted on the wall higher than the bumper to prevent collision.
- Do not install the equipment in places that are enclosed, unventilated, without proper fire fighting facilities, or difficult for firefighters to access. Do not place flammable or explosive materials around the equipment. It is recommended that the equipment be mounted on a wall to avoid contact with water.
- It is recommended to install the equipment in a sheltered place or under an awning to avoid direct sunlight or rain.
- For areas prone to natural disasters such as floods, debris flows, earthquakes, and typhoons, take corresponding precautions for installation.
- Do not install the equipment in an easily accessible position because the temperature of the enclosure and heat sink is high when the equipment is running.
- Do not install the equipment on a moving object, such as ship, train, or car.
- Ensure that the equipment is stored in a clean, dry, and well ventilated area with proper temperature and humidity and is protected from dust and condensation.
- Keep the installation and operating environments of the equipment within the allowed ranges. Otherwise, its performance and safety will be compromised.
- Do not install, use, or operate outdoor equipment and cables (including but not limited to moving equipment, operating equipment and cables, inserting connectors to or removing connectors from signal ports connected to outdoor facilities, working at heights, performing outdoor installation, and opening doors) in harsh weather conditions such as lightning, rain, snow, and level 6 or stronger wind.
- Do not install the equipment in an environment with dust, smoke, volatile or corrosive gases, infrared and other radiation, organic solvents, or salty air.
- Do not install the equipment in an environment with conductive metal or magnetic dust.
- Do not install the equipment in an area conducive to the growth of microorganisms such as fungus or mildew.
- Do not install the equipment in an area with strong vibration, noise, or electromagnetic interference.
- Ensure that the site complies with local laws, regulations, and related standards.
- Ensure the installation site has solid, stable ground that is not soft, spongy, or prone to settling. Select a location above the highest recorded water level and away from low-lying areas where water or snow may accumulate.
- Do not install the equipment in a position that may be submerged in water.
- In regions with dense vegetation, regularly remove weeds and reinforce the ground beneath the modules with cement or gravel.
- Do not install the equipment outdoors in salt-affected areas because it may be

corroded. A salt-affected area refers to the region within 500 m of the coast or prone to sea breeze. Regions prone to sea breeze vary with weather conditions (such as typhoons and monsoons) or terrains (such as dams and hills).

- Before installation, operation, and maintenance, clean up any water, ice, snow, or other foreign objects on the top of the equipment.
- When installing the equipment, ensure that the installation surface is solid enough to bear the weight of the equipment.
- After installing the equipment, remove the packing materials such as cartons, foam, plastics, and cable ties from the equipment area.

10.3 Operational Safety

DANGER

- When working at heights, wear a safety helmet and safety harness or waist belt and fasten it to a solid structure. Do not mount it on an insecure moveable object or metal object with sharp edges. Make sure that the hooks will not slide off.

WARNING

- Ensure that all necessary tools are ready and inspected by a professional organization. Do not use tools that have signs of scratches or fail to pass the inspection or whose inspection validity period has expired. Ensure that the tools are secure and not overloaded.
- Do not drill holes into the equipment. Doing so may affect the sealing performance and electromagnetic containment of the equipment and damage components or cables inside. Metal shavings from drilling may short-circuit boards inside the equipment.

General Instructions

- Repaint any paint scratches caused during equipment transportation or installation in a timely manner. Equipment with scratches must not be exposed for an extended period of time.
- Do not perform operations such as arc welding and cutting on the equipment without evaluation by the Company.
- Do not install other devices on the top of the equipment without evaluation by the Company.
- When performing operations over the top of the equipment, take measures to protect the equipment against damage.
- Use correct tools and operate them in the correct way.

Working at Heights

- Any operations performed 2m or higher above the ground shall be supervised properly.
- Only trained and qualified personnel are allowed to work at heights.
- Do not work at heights when steel pipes are wet or other risky situations exist. After the preceding conditions no longer exist, the safety owner and relevant technical personnel need to check the involved equipment. Operators can begin working only after safety is confirmed.
- Set a restricted area and prominent signs for working at heights to warn away irrelevant personnel.
- Set guard rails and warning signs at the edges and openings of the area involving working at heights to prevent falls.
- Do not pile up scaffolding, springboards, or other objects on the ground under the area involving working at heights. Do not allow people to stay or pass under the area involving working at heights.
- Carry operation machines and tools properly to prevent equipment damage or personal injury caused by falling objects.
- Personnel involving working at heights are not allowed to throw objects from the height to the ground, or vice versa. Objects shall be transported by slings, hanging baskets, aerial work platforms, or cranes.
- Do not perform operations on the upper and lower layers at the same time. If unavoidable, install a dedicated protective shelter between the upper and lower layers or take other protective measures. Do not pile up tools or materials on the upper layer.
- Dismantle the scaffolding from top down after finishing the job. Do not dismantle the upper and lower layers at the same time. When removing a part, ensure that other parts will not collapse.
- Ensure that personnel working at heights strictly comply with the safety regulations. The Company is not responsible for any accident caused by violation of the safety regulations on working at heights.
- Behave cautiously when working at heights. Do not rest at heights.

Using Ladders

· Use wooden or insulated ladders when you need to perform live-line working at heights.

· Platform ladders with protective rails are preferred. Single ladders are not recommended.

· Before using a ladder, check that it is intact and confirm its load bearing capacity. Do not overload it.

· Ensure that the ladder is securely positioned and held firm.

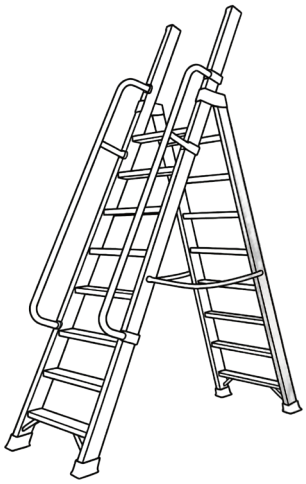

· When climbing up the ladder, keep your body stable and your center of gravity between the side rails, and do not overreach to the sides.

· When a step ladder is used, ensure that the pull ropes are secured.

· If a single ladder is used, ensure that the wider end of the ladder is at the bottom, and take protective measures to prevent the ladder from sliding.

· If a single ladder is used, do not climb higher than the fourth rung of the ladder from the top.

· If a single ladder is used, the recommended angle for the ladder against the floor is 75 degrees, as shown in the following figure. A square can be used to measure the angle.

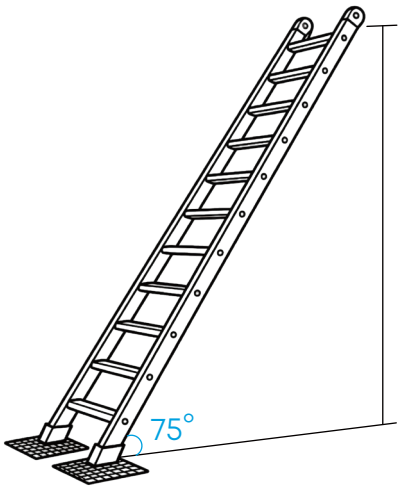

· If you use a single ladder to climb up to a platform, ensure that the ladder is at least 1 m higher than the platform.

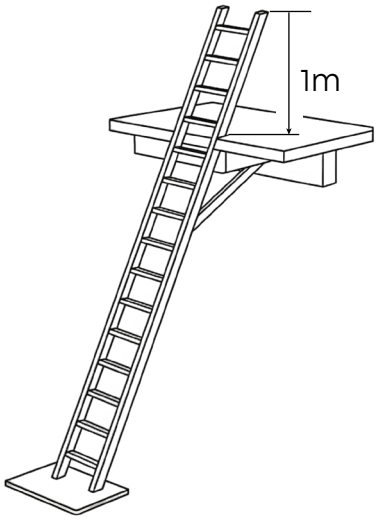

Drilling Holes

· Obtain consent from the customer and contractor before drilling holes.

· Wear protective equipment such as safety goggles and protective gloves when drilling holes.

· To avoid short circuits or other risks, do not drill holes into buried pipes or cables.

· When drilling holes, protect the equipment from shavings. After drilling, clean up any shavings.

10.4 Battery Safety

DANGER

· Do not connect the positive and negative poles of a battery together. Otherwise, the battery may be short-circuited.

WARNING

· Tighten the screws on copper bars or cables to the torque specified in this document. Periodically confirm whether the screws are tightened, check for rust, corrosion, or other foreign objects, and clean them up if any. Loose screw connections will result in excessive voltage drops and batteries may catch fire when the current is high.

· When installing batteries, do not place installation tools, metal parts, or sundries on the batteries. After the installation is complete, clean up the objects on the batteries and the surrounding area.

· After unpacking batteries, place them in the required direction. Do not place a battery upside down or vertically, lay it on one side, tilt it, or stack it. Ensure that the batteries do not fall or get damaged. Otherwise, they will need to be scrapped.

CAUTION

- Install the battery modules in sequence from bottom to top and from left to right. Lift the modules horizontally and evenly to prevent tipping caused by a high center of gravity.
- Secure the fixed bracket before installing the power module.
- Ensure the power module and main breaker are off before installation.
- The battery circuit must remain disconnected during installation or maintenance.

General Instructions

- Do not use a damaged battery (such as damage caused when a battery is dropped, bumped, bulged, or dented on the enclosure), because the damage may cause electrolyte leakage or flammable gas release. In the case of electrolyte leakage or structural deformation, contact the installer or customer support immediately to remove or replace the battery. Do not store the damaged battery near other devices or flammable materials and keep it away from non-professionals.
- Before installing a battery module, check that its enclosure is not deformed or damaged.

10.5 Transportation Safety

- Do not remove any protective components from the equipment terminals, such as protective covers or waterproof caps, during transportation.
- Handle the equipment with care. Avoid drops or impacts, and always ensure personal safety while moving them.
- Move the equipment stably with balanced force at an even and low speed. Put down the equipment stably and slowly to prevent any collision or drop from scratching the surface of the equipment or damaging the components and cables.
- When transporting the equipment using a pallet truck or forklift, ensure that the tynes are properly positioned so that the equipment does not topple. Before moving the equipment, secure it to the pallet truck or forklift using ropes. When moving the equipment, assign dedicated personnel to take care of it.
- Be cautious to prevent injury when moving heavy objects.

· If multiple persons need to move a heavy object together, determine the manpower and work division with consideration of height and other conditions to ensure that the weight is equally distributed.



< 18 kg
(40 lbs)



18-32 kg
(40-70 lbs)

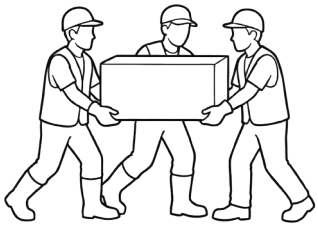

32-55 kg
(70-121 lbs)



55-68 kg
(121-150 lbs)

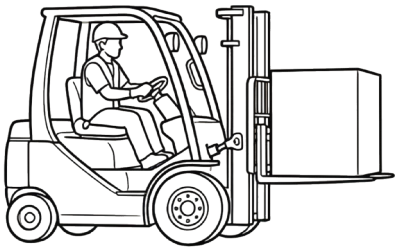

> 68 kg
(150 lbs)

· If two persons or more move a heavy object together, ensure that the object is lifted and landed simultaneously and moved at a uniform pace under the supervision of one person.
· Wear personal protective gears such as protective gloves and shoes when manually moving the equipment.
· To move an object by hand, approach to the object, squat down, and then lift the object gently and stably by the force of the legs instead of your back. Do not lift it suddenly or turn your body around.
· Do not quickly lift a heavy object above your waist. Place the object on a workbench that is half-waist high or any other appropriate place, adjust the positions of your palms, and then lift it.
· When moving a heavy object, be aware of the workbench, slope, staircase, and slippery places. When moving a heavy object through a door, ensure that the door is wide enough to move the object and avoid bumping or injury.
· When transferring a heavy object, move your feet instead of turning your waist around. When lifting and transferring a heavy object, ensure that your feet point to the target direction of movement.
· Choose sea or roads in good conditions for transportation. Do not transport the equipment by railway or air. Avoid tilt or jolt during transportation.

10.6 Storage Requirements

WARNING

- Ensure that batteries are stored in a dry, clean, and ventilated indoor environment that is free from sources of strong infrared or other radiations, organic solvents, corrosive gases, and conductive metal dust. Do not expose batteries to direct sunlight or rain and keep them far away from sources of heat and ignition.
- If a battery is faulty (with scorch, leakage, bulge, or water intrusion), move it to a dangerous goods warehouse for separate storage. The distance between the battery and any combustible materials must be at least 3m. The battery must be scrapped as soon as possible.
- Place batteries correctly according to the signs on the packing case during storage. Do not place batteries upside down, lay them on one side, or tilt them. Stack batteries in accordance with the stacking requirements on the packing cases.
- Store batteries in a separate place. Do not store batteries together with other devices. Do not stack batteries too high. If a large number of batteries are stored onsite, it is recommended that the site be equipped with qualified fire fighting facilities, such as fire sand and fire extinguishers.

CAUTION

- It is recommended that batteries be used soon after being deployed onsite. Batteries that have been stored for an extended period shall be charged periodically. Otherwise, they may be damaged.

General Instructions

- Store the equipment according to the storage requirements. Equipment damage caused by unqualified storage conditions is not covered under the warranty.
- The storage environment must comply with local regulations and standards.
- The storage environment must be clean and dry. The equipment must be protected against rain and water.
- The air must not contain corrosive or flammable gases.
- The storage environment requirements are as follows:
  - Ambient temperature: -4 to 131°F (-20 to 55°C)
  - Relative humidity: 0% to 100%
- If a battery has been stored for longer than the allowed period, it must be checked and tested by professionals before use.
- Proof that the equipment is stored according to the requirements must be available, such as temperature and humidity log data, storage environment photos, and inspection reports.
- Ensure that batteries are delivered based on the "first in, first out" rule.

11. Appendices

Appendix 1. Overload Capacity

During short bursts of high-power demand (such as motor startup), understanding overload capacity helps you:

· Avoid unnecessary equipment oversizing.

· Safely handle power surges without damaging devices.

· Prevent overheating and extend system service life.

· Keep critical devices running during grid outages or emergency startup.

Overload Performance

The following table summarizes the E10 System's overload limits and allowable durations before protection activates. For example, if your device requires 120% startup power and its startup time is less than 5 minutes, the device can start and operate without interruption.

Output Load Rate	Operation Duration (E10)
< 100%	Continuous operation
100% to 130%	Up to 90 minutes*
130% to 150%	Up to 30 seconds
150% to 200%	Up to 10 seconds
200% to 230%	Up to 1 second

*Extended Overload Capability

At an ambient temperature of 86 °F (30 °C), E10 can deliver a continuous 10 kW output for up to 90 minutes when operating in off-grid mode, configured with one power module and at least two battery modules.

Note: The stated performance applies only under the specified conditions. Results may vary with ambient conditions and system setup.

Appendix 2. LRA Compatibility

For compressor-based devices (such as air conditioners, heat pumps, and refrigerators), confirm that the device's LRA (Locked Rotor Amps) does not exceed E10's LRA. This ensures stable startup without triggering protection or power loss.

Number of Power Modules	Number of Battery Modules	LRA (E10)
1	1	120A
1	2 to 5	155A
2 to 3	2 to 5 (per power module)	275A

Check your device's LRA rating on the nameplate, datasheet, or user manual.

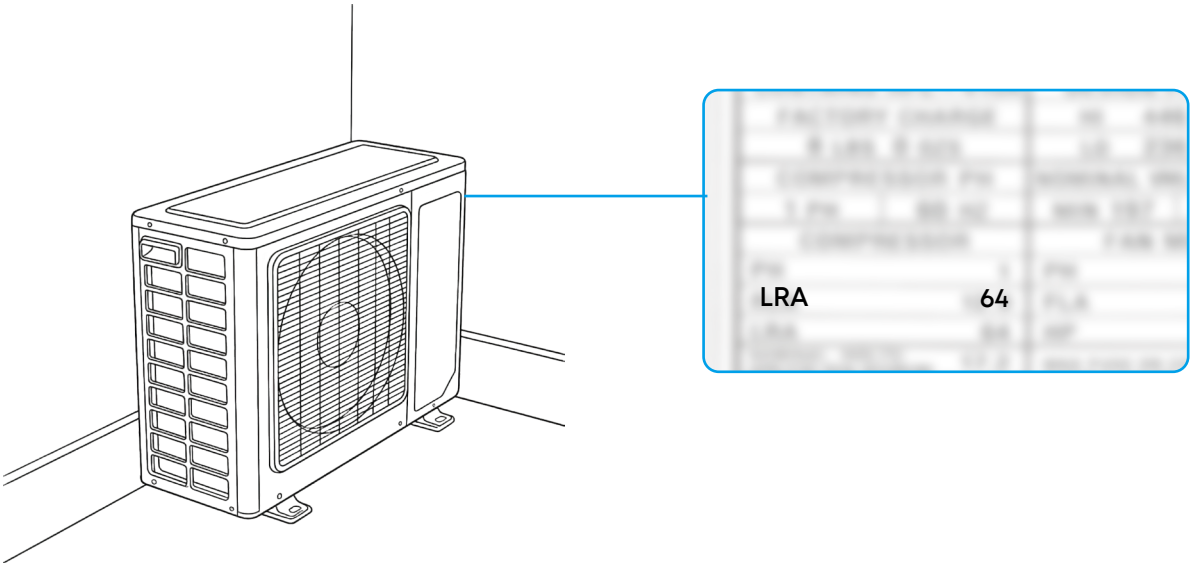

Additional Notes on Central Air Conditioners

The LRA of central air conditioners may increase over time due to compressor aging.

Estimate the actual LRA based on service life and ensure it remains within E10's rated limit. If the estimated LRA approaches or exceeds this limit, install a soft starter on the air conditioner to ensure stable operation.

Service Life	Estimated LRA Increase
≤ 10 years	0%
> 10 years	20%

Example Calculation

E10	LRA: 120A (Configured with One Power Module and One Battery Module)
Central Air Conditioner	Nameplate LRA: 118A Service life: 12 years Estimated LRA = 118A × 120% = 142A ＞ 120A limit)
Recommendation	Install a soft starter to ensure stable operation.